GEN12S-GEN20B

Parts List

15-April-2008

This parts list is current as of the above revision date.

See http://www.rheempartslists.net/92-42801-GEN12S-GEN20B.pdf for the current revision.

Standby Generators

Table of Contents

Model Explanation . . . . . Page 3

Parts Numbers
- General Assembly . . . . . Page 4
- General Assembly (cont.) . . . . . Page 5
- Control Panel . . . . . Page 6
- Enclosure Parts . . . . . Page 7
- Alternator Parts . . . . . Page 8
- Power Management Parts . . . . . Page 9
- Common Engine Parts . . . . . Page 10

Drawings/Photographs
- General Assembly Drawing . . . . . Page 11
- Control Panel Drawing . . . . . Page 12
- Enclosure Parts Drawing . . . . . Page 13
- Alternator Parts Drawing . . . . . Page 14
- Power Management Parts Drawing . . . . . Page 15

Notes . . . . . Page 16

G	E	N	2	0	B
(1)			(2)		(3)

(1) PRODUCT TYPE
GEN = Standby Generator

(2) OUTPUT CAPACITY (EQUIVALENT)
12 = 12,000 kW
15 = 15,000 kW
20 = 20,000 kW
25 = 25,000 kW
30 = 30,000 kW

(3) SERIES
B = Power Management Included / Natural Gas or LP
S = Power Management Optional / Natural Gas or LP
NG = Power Management Optional / Natural Gas
LP = Power Management Optional / LP

No.	Notes	MODEL OUTPUT CAPACITY SERIES	GEN 12/20 S/B
		GENERAL ASSEMBLY PARTS	
1		Base - Mounting	X201381GS
2		Mount - Vibration	198899GS
3		Hex Head Screw - Trilobular 5/16 - 18 x 1/2	CALL
4	Stk	Solenoid - Gas Fuel	194683GS
5		Fitting - Coupling	194829GS
6	Stk	Regulator	194830GS
7		Bracket - Mounting Solenoid	CALL
8		Fitting - 1/2 Flare 3/8 - 18 NPT	CALL
9	2	Hex Head Cap Screw - M8 - 1.25 x 12	CALL
10	2	Hex Head Cap Screw - M6 - 1.0 x 30	CALL
11	2	Washer - 1/4 Lock	CALL
12	2	Nut - M6 - 1.0	CALL
13		Hex Head Screw - Trilobular - 1/4 - 20 x 1/2	CALL
14	Stk	Battery	194818GS
15		Wire - A - Red	CALL
16		Kit - Battery Hardware	198913GS
17		Wire - A - Black	CALL
18	2	Hex Head Cap Screw - M8 1.25 x 16	N/A
19		Bracket - Muffler Mounting Base	201824GS
20	2	Washer - Flat 5/16 - M8	N/A
21	Stk	Valve - Oil Drain	186071GS
22		Clamp - Hose Band	CALL
23		Hose - Oil Drain	CALL
24		Decal - Oil Drain	CALL
25	2	Hex Head Cap Screw - 5/16 - 18 x 1	N/A
26	2	Nut - 5/16 - 18	N/A
27	2	Washer - Lock 5/16 - M8	N/A
28	2	Hex Head Screw w/Washer - 5/16 - 24 x 3/4	N/A
29	2	Hex Head Cap Screw - 1/4 - 20 x 1	N/A
30	2	Hex Head Cap Screw - 5/16 -18 x 1 - 3/4	N/A
31		Bracket - Alternator Support	CALL
32		Plate - Blocking Air - Alternator	CALL
33		Nut - 1/4 - 20 Flange - Nylon	CALL
34	2	Washer - Shakeproof Ext. M6-1/4	N/A
35		Wire - Ground	CALL
36	2	Washer - Lock - M10	N/A
37	2	Nut - Hex - M10 - 1.5	N/A
38	2	Hex Head Cap Screw - 1/4 - 20 x 3/4	N/A
39		Bracket - Engine Mounting	CALL
40		Duct - Air	CALL
41		Phillips Truss Head Screw - #6 x 1/2	CALL
42	2	Washer - Lock 3/8	N/A
43	2	Hex Head Cap Screw - 3/8 - 16 x 1-1/4	N/A
44		Wire	CALL

No.	Notes	MODEL OUTPUT CAPACITY SERIES	GEN 12/20 S/B
		GENERAL ASSEMBLY PARTS (CONTINUED)	
45		Plate - Switch Oil Temp	186206GS
46	2	Nut - Hex 1/4 - 20	N/A
47	2	Washer - M6 - Flat 1/4	N/A
48	2	Hex Head Cap Screw - M10 - 1.5	N/A
49		Disk - Engine Air	CALL
50		Screw	CALL
51	1	Assembly - Alternator	N/A
52		Allen Screw - M8 - 1.25 x 20	CALL
53		Decal - Caution Hot Surface	CALL
54		Gasket	806425
55		Muffler	198758GS
56		Base - Muffler Box	CALL
57		Kit - Insulation - Muffler Base	CALL
58		Crimptite - 10-24 x 1/2	CALL
59		Assembly - Bulkhead - Alternator End w/Insulation	202111GS
60		Kit - Insulation - Muffler Box	CALL
61		Collector - Muffler Box	CALL
62		Box - Muffler Top	CALL
63		Screw. 10 - 32 x 5/8	CALL
64	2	Phillips Pan Head Machine Screw - 4-40 x 0.19	N/A
65	2	Washer - Lock #4	N/A
66	Stk	Switch - Oil Temp	186205GS
67		Wire - A	CALL
68	Stk	Solenoid/Bracket	691656
900	1	Engine - Briggs & Stratton	N/A
901	Stk	Fuel Hose	843293
902		Clamp	CALL

No.	Notes	MODEL OUTPUT CAPACITY SERIES	GEN 12/20 S/B
		GENERAL ASSEMBLY PARTS - NOT ILLUSTRATED	
	Stk	Cap - Funnel Oil Bottle	B3518GS
	Stk	Hose - Flex	202295GS
	Stk	Kit - LED Remote	198866GS
	3,Stk	Kit - Cold Weather (Includes Battery and Oil Warmers)	6030

No.	Notes	MODEL OUTPUT CAPACITY SERIES	GEN 12/20 S/B
		CONTROL PANEL PARTS	
69		Assembly - Cover - Circuit Breaker w/Decals	CALL
70	2	Screw- 10 x 0.62 - Plastite	N/A
71	Stk	Circuit Breaker - 60A - 2 Pole	201089GS
72		Bracket - Mounting Breaker	CALL
73		Lug - Ground Connect	CALL
74		Bolt - 1/4-10 x 1 - Plastite	CALL
75	Stk	Fuse - Auto Type 15A	198573GS
76	Stk	Assembly - Control Panel	202118GS
77		Screw - PT - M4 - 1.79 x 16.0	CALL
78		Assembly - Duct - Engine Air w/Decals	CALL
79		Decal - Danger High Voltage	CALL
80		Decal - Terminal Block	CALL
81		Decal - Ground - Neutral	CALL
82		Decal - Warning - Outdoor Install	CALL
83		Decal - Caution - Standby	CALL
84		Decal - Warning - Auto Start	CALL
85		Decal - Caution - Electric Shock	CALL
86		Decal - Warning Shock	CALL
87	2	Nut - 1/4 - 20	N/A
88	2	Washer - Shakeproof - Ext M6 1/4	N/A
89	2	Hex Head Cap Screw - 1/4 - 20 x 3/4	N/A

No.	Notes	MODEL CAPACITY SERIES	GEN 12/20 S/B
		CONTROL PANEL PARTS - NOT ILLUSTRATED	
		Parts Bag/Manual	202174GS
		Harness - Wire - Control Board to Engine/Alternator	201090GS
		Harness - Wire - E1 and E2 Sensing	198517GS
	Stk	Connector - Terminal - 2 Pin	198515GS
	Stk	Connector - Terminal - 10 Pin	198516GS

No.	Notes	MODEL OUTPUT CAPACITY SERIES	GEN 12/20 S/B
		ENCLOSURE PARTS	
90		Pad - Mounting w/Holes	197275GS
91		Base - Mounting	X201381GS
92		Assembly - Bulkhead - Engine End	202110GS
93		Assembly - Door - Engine End	202107GS
94		Assembly - Duct - Engine Air	CALL
95		Assembly - Support - Rail	CALL
96		Hex Head Screw - Trilobular - 1/4-20 x 1/2	CALL
97		Bushing - Snap - 1-3/8	CALL
98		Bushing - Snap - 1-1/2	CALL
99		Plug - Dome - 1-1/2	CALL
100	2	Hex Head Cap Screw - 3/8 - 16 x 1	N/A
101	2	Washer - Flat - 3/8 - M10	N/A
102	2	Washer - Lock 3/8	N/A
103	2	Nut - 3/8 - 16	N/A
104		Assembly - Door	202108GS
105		Seal - Foam - Engine Air	CALL
106		Mount - Tie Wrap	CALL
107		Duct - Rubber Alternator	CALL
108		Adapter - Alternator	CALL
109		Assembly - Roof/Siderails	202109GS
110		Assembly - Bulkhead - Alternator End	202111GS
111		Decal - Caution Hot Muffler	CALL
112		Cover - Air Intake Alternator	194679GS
113		Assembly - Vent - Exhaust	198926GS
114		Clip - Tree	CALL
115		Assembly. - Vent - Alternator	CALL
116		Seal - Foam	CALL
117		Cover - Air Intake Engine	194694GS
118		Insulation - Engine Door	196398GS
119		Seal - Foam	CALL
120		Insulation - Front/Rear Door	196397GS
121		Insulation - Roof	CALL
122		Plug - Dome	198460GS
123		Retainer - Hose	CALL
124	Stk	Kit - Door - Hinge	198890GS
125	Stk	Set - Latch Key	194828GS
126	Stk	Kit - Door Latch	198889GS

No.	Notes	MODEL OUTPUT CAPACITY SERIES	GEN 12/20 S/B
		ALTERNATOR PARTS	
127		Bracket - Drive End	CALL
128		Screen - Protection	CALL
129		Bolt - Shaft Stay	CALL
130		Screw	CALL
131		Frame and Stator	192969GS
132		Plug - Rubber Grid	CALL
133		Grid	CALL
134	2	Nut	N/A
135		Box - Terminal Lid	CALL
136		Terminal Board	192968GS
137	2	Washer - Flat - M5	N/A
138	2	Nut - #10-32	N/A
139	Stk	Capacitor	192974GS
140	2	Screw - #10-32 x 3/4	N/A
141		Diode - Electronics Kit	194579GS
142		Assembly - Rotor	192971GS
143	2	Screw - M8 x 1.25 x 35mm	N/A
144	2	Washer - M6 - Shakeproof	N/A
145	2	Nut - 1/4-20	N/A

No.	Notes	MODEL OUTPUT CAPACITY SERIES	GEN 20 B
		POWER MANAGEMENT PARTS	
146	1	Assembly - Enclosure	N/A
147	Stk	Board - Load Control Center Relay	196616GS
148		Spacer - PCB Board	CALL
149		Harness - Wire - Load Control Center	198112GS
150	Stk	Board - Load Control Center	201924GS
151		Clip - Latching Wire	CALL
152	2	Nut - 1/4 - 20	N/A
153	2	Washer - Lock 1/4	N/A
154		Terminal	CALL
155	2	Washer - Shakeproof - Ext M6 - 1/4	N/A
156		Spacer	CALL
157		Decal	CALL
158		Decal - Warning	CALL
159	2	Phillips Pan Head Machine Screw - 8-32 x 1	N/A
160		Spacer - 4 x 25	CALL
161		Nut - Hex - 8 - 32 - w/Locking Insert	CALL

No.	Notes	MODEL OUTPUT CAPACITY SERIES	GEN 20 B
		POWER MANAGEMENT PARTS - NOT ILLUSTRATED	
		Current Transformer	195728GS
		Block - Terminal w/Levers	197956GS
		Lug - 1/4 Tab	CALL
		Lug - 1/4 - 18-22	CALL

No.	Notes	MODEL OUTPUT CAPACITY SERIES	GEN 12/20 S/B
		ENGINE PARTS	
Note: The engine parts shown below are the common service parts for this model. Other engine repair parts should be obtained through an authorized Briggs & Stratton repair facility.			
		MAINTENANCE KIT	
	Stk	Maintenance Kit - This kit will service one generator. The following individual items included with kit may be ordered separately	6035
	Stk	Spark Plug	491055S
	Stk	Oil - Synthetic	100074
	Stk	Cartridge - Air Cleaner	841359
	Stk	Precleaner - Air Cleaner	272490S
	Stk	Oil Filter	492932S
		COMMON ENGINE PARTS	
		Wire Assembly	692319
		Armature - Magneto	492341
		Motor - Starter	691564
		Tube - Breather	808686
		Breather Assembly	808648
		Dipstick	693175
		Gasket - Rocker Cover	806039S
		Gasket - Exhaust	806425
		Plug - Oil Fill	491832
		Gasket - Sealing	691612
		Washer - Sealing	691766
		Nut - Rocker Cover	692055
		Gasket - Air Cleaner	692081
		Seal - Dipstick Tube	693172
		Drive - Starter	496881
		Switch - Oil Pressure	690233
		Spring - Governor	692070
		Spring - Governor Idle	692069
		Knob - Air Cleaner	691985
		Hose/Clamp Assembly (Oil Cooler)	499051
		Oil Filter Adapter w/Gasket	808537
		Gasket - Oil Filter Adapter	692063

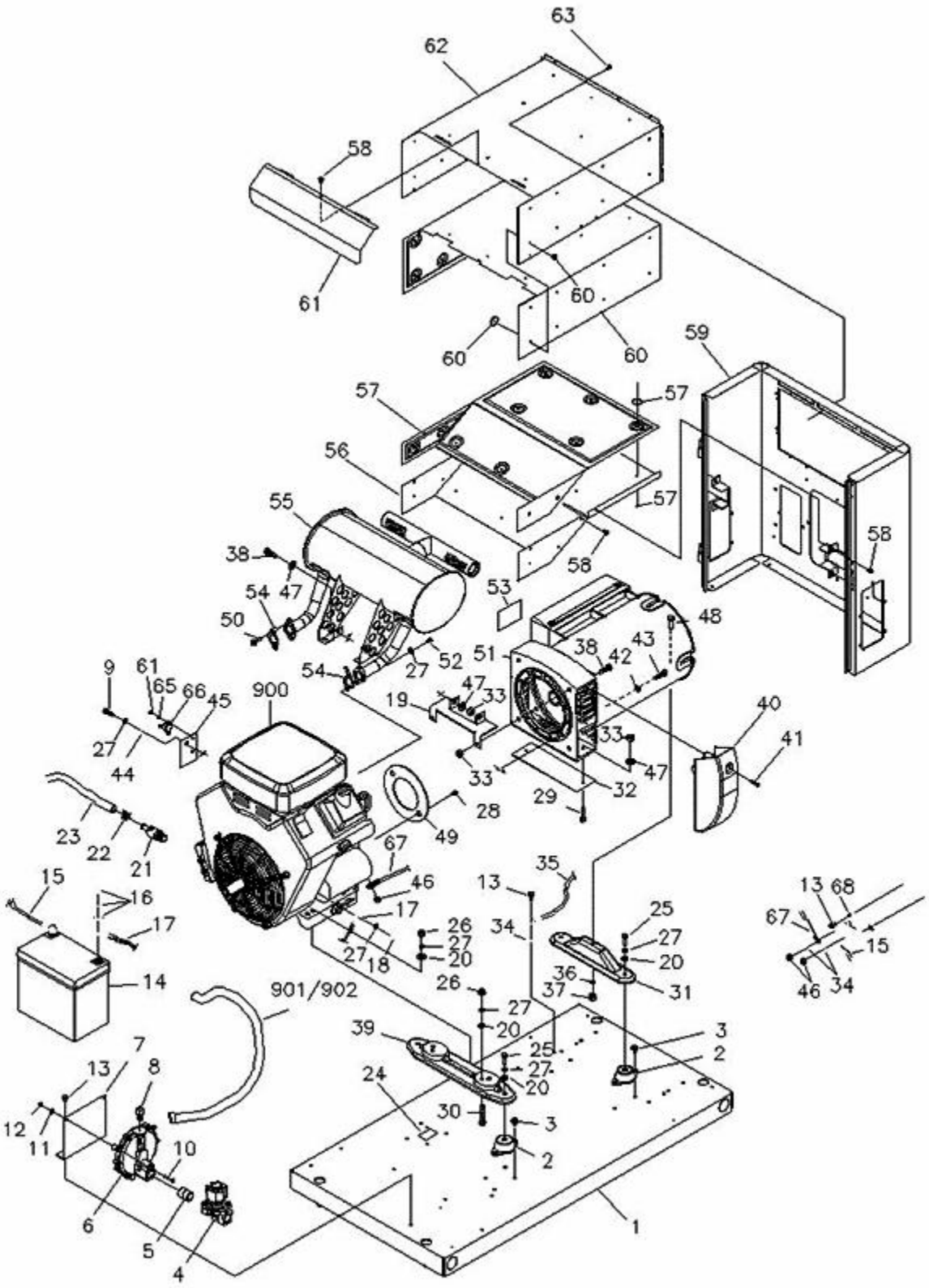

General Assembly Drawing

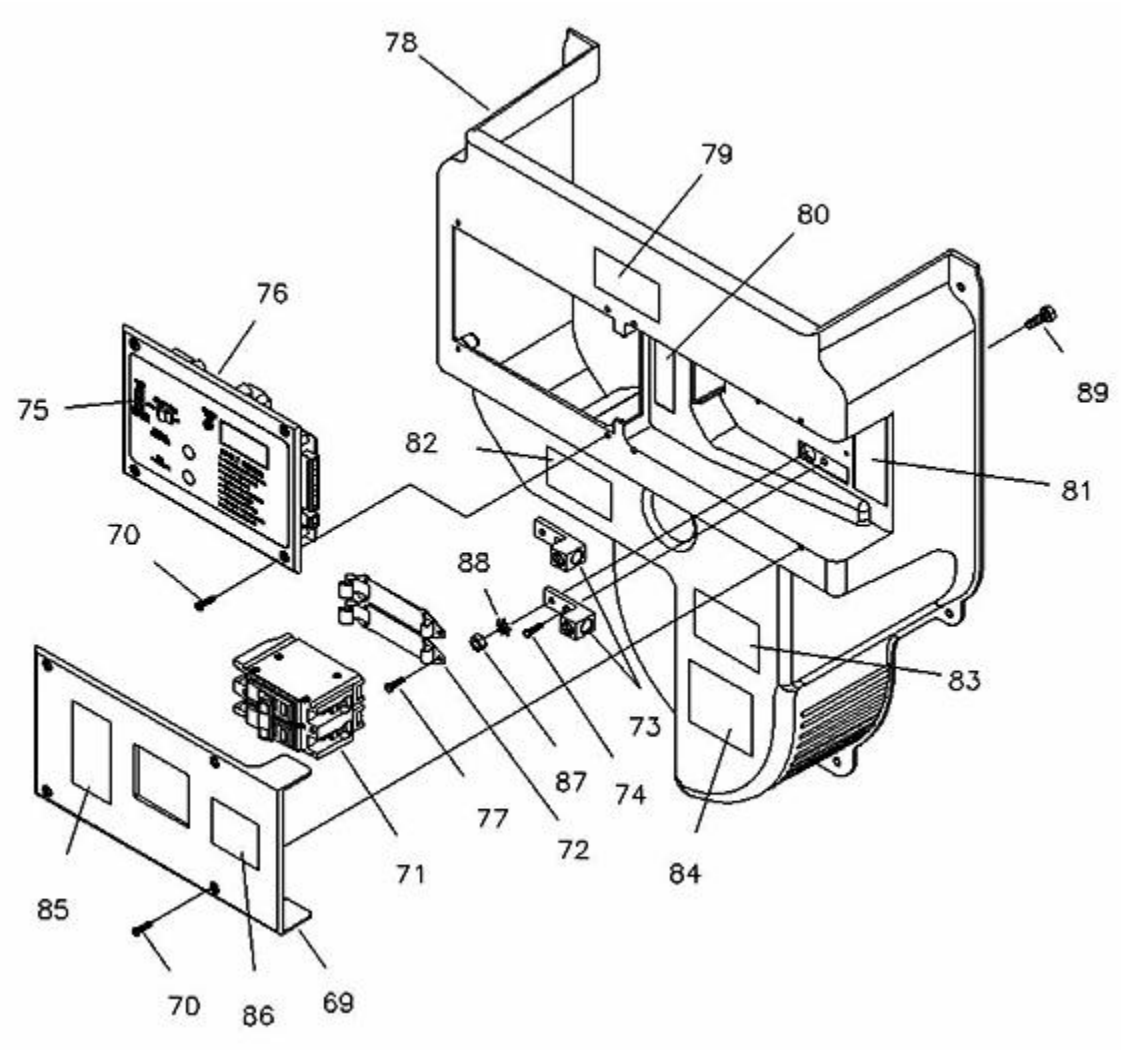

Control Panel Drawing

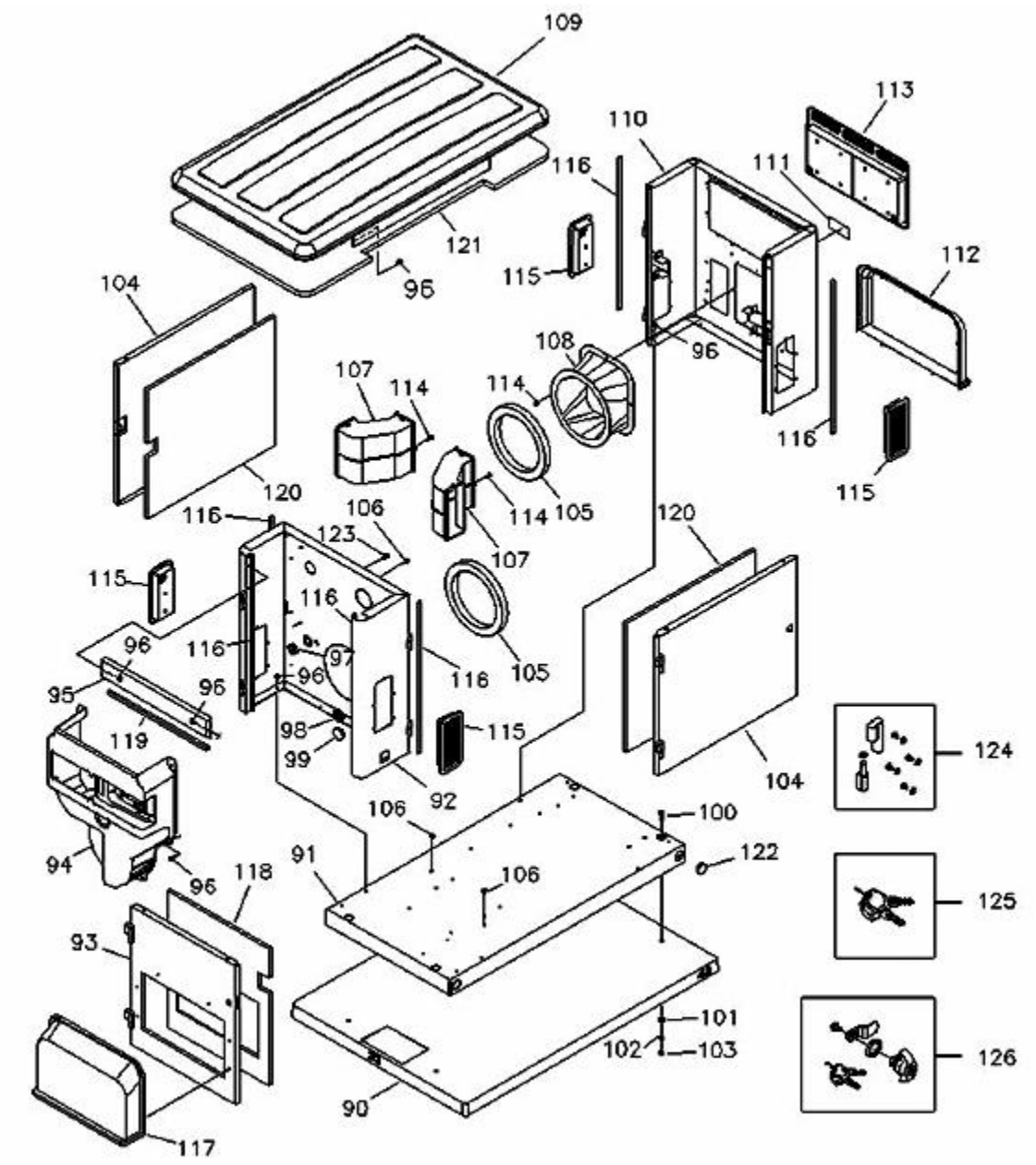

Enclosure Parts Drawing

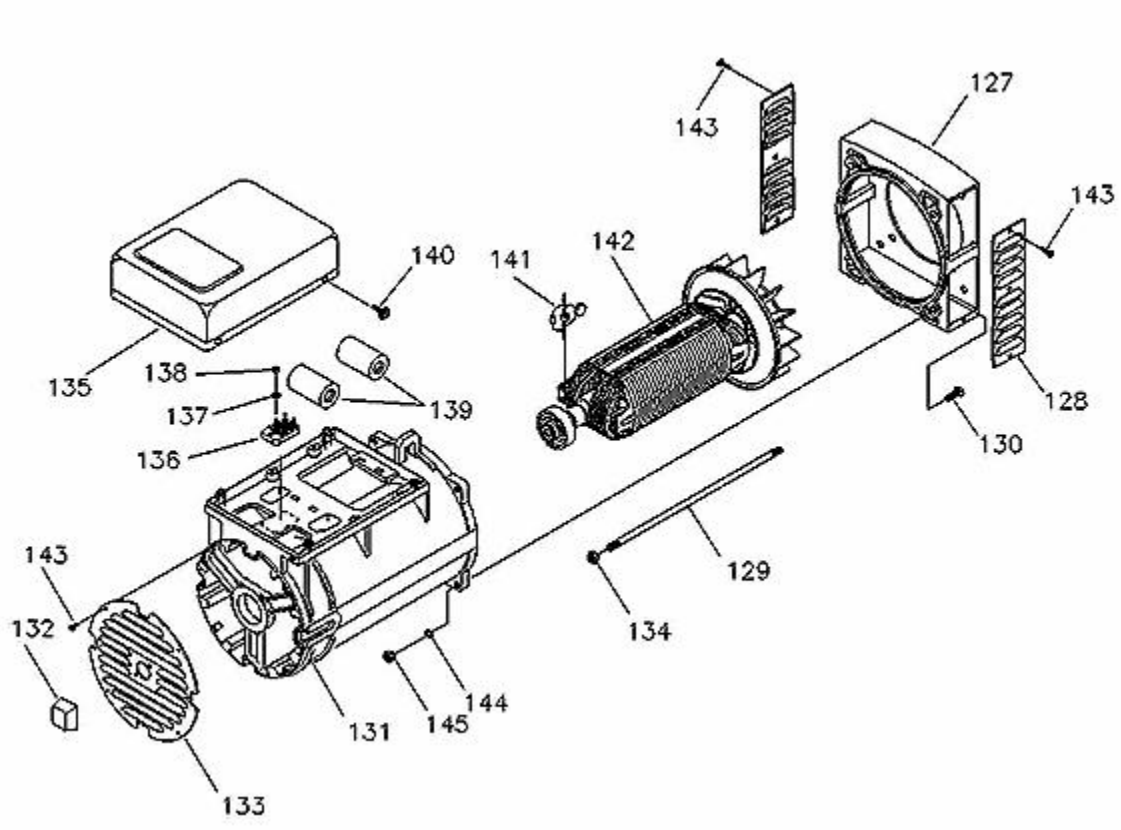

Alternator Parts Drawing

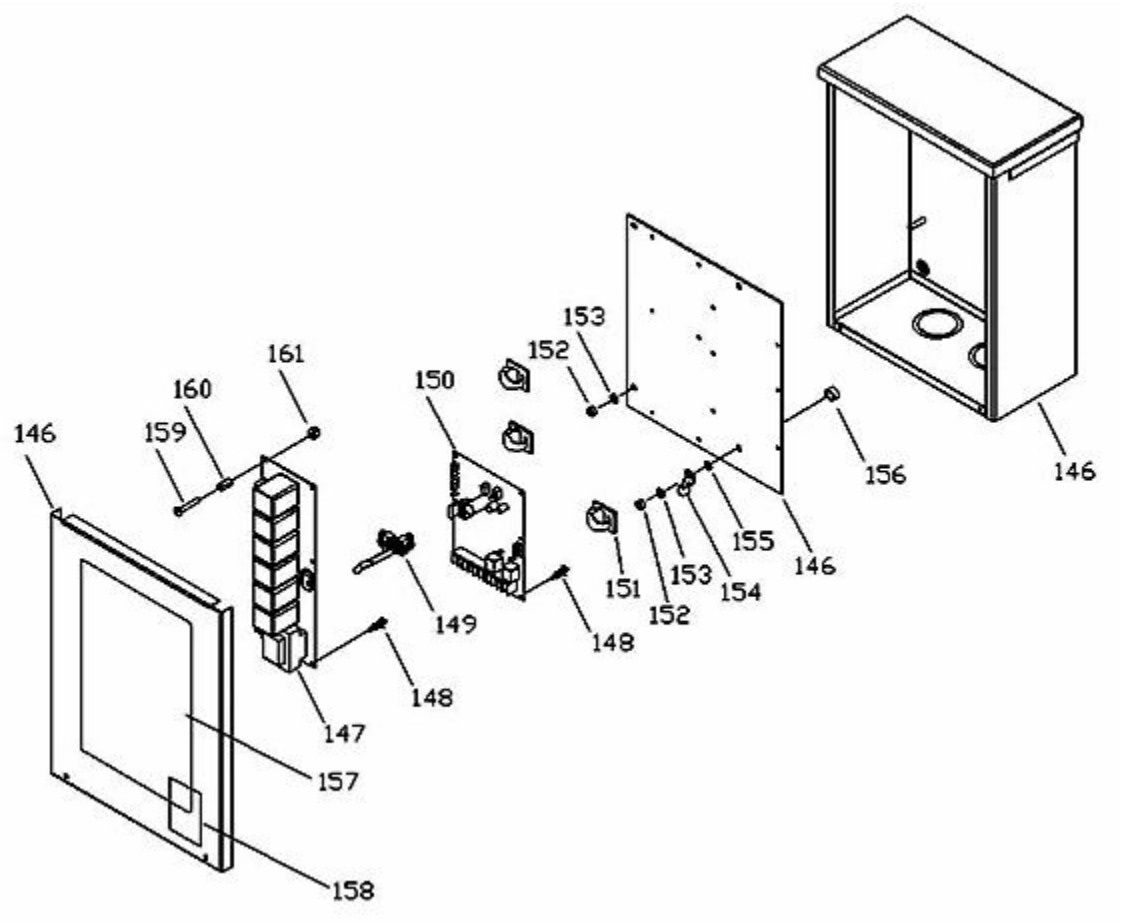

Power Management Parts Drawing

NOTES

N/A	Not Applicable
Stk	It is recommended that stock be maintained for this part.
CALL	Part will be set-up on customer request
1	Non-serviceable part
2	Hardware store item
3	Recommended for areas with temperatures below 40F. Required for areas with temperatures below 32F.

Power Systems Technical Support: 1-877-369-9400