The new degree of comfort.™

Electric boosters are designed to fit under counters and deliver sanitizing rinse water for all stationary rack and conveyor type commercial dishwashers

Features & Benefits

Our 10 gallon electric booster will raise preheated or cold water to 180° F rinse temperature for compliance with UL sanitation (NSF5) and all federal, provincial, municipal and local health department sanitation codes. They are available in 6 kW through 18 kW and in 208, 240 and 600 voltages.

System Sentinel

All electric booster models employ an element diagnostic panel, utilizing light emitting diodes (L.E.D.), corresponding to the number and location of each heating element. L.E.D.'s are energized when the electric elements are operating. An unlit L.E.D. pinpoints the exact location of a non-functioning element, making element operation diagnosis simple and positive.

Long Life Tank Design

Proprietary steel formulation with a unique coat of high temperature porcelain enamel maximizes corrosion resistance resulting in a superior tank design.

Long Life Heating Elements

Separate screw-in type elements feature a Nichrome wire filament, embedded in magnesium oxide sealed in a copper tube to resist water chemical corrosion…for long element life and a long life performance. Elements are directly immersed in the water for maximum recovery efficiency (98%) and are easily changed by simply screwing new ones into the tank.

Anode rods

Two (2) magnesium anodes are installed in each tank for maximum corrosion resistance.

ASME Rated T&P Valve

Factory installed relief valve

Electrical Connections

Pre-wired, accessible control box with multiple knock-outs on side in size selections to match the National Electric Code. Sizes range from 1/2" to 2". A grounding screw is provided for attaching an equipment grounding conductor.

Single Panel Control Box

It comes with hinged stainless steel door that provides immediate access to all electrical components and elements.

Terminal Block

All models are equipped with UL Listed terminal blocks for simplicity of installation. The terminal block will accept either copper or aluminum field connect wire.

240 Volt Control Circuit

All units are furnished with a fused 240 volt control circuit. All controls (thermostats, high temperature limit, etc.) are operated off of this basic 240 volt control circuit.

Warranty

3-Year limited tank warranty

See Commercial Warranty Certificate for complete information.

Efficiency | All models meet or exceed thermal efficiency and standby loss requirements of current ASHRAE standards. (Part of the Federally mandated Energy Policy Act (EPact)). Also exceeds energy efficiency codes of all states including California Energy Commission (CEC).

Safety and Construction | Design certified by Underwriters Laboratories (UL) to meet UL standard 1453 as electric booster and commercial storage tank water heaters. All models are UL Sanitation (NSF5). **Certified for 150 PSI maximum working pressure.**

Continued next page

Rheem Booster
10-Gallon Capacity
6kW-18kW
208, 240 and 600 Voltages

PRINTED IN U.S.A. 04/13 WP FORM NO. RR102CE-2CAN Rev. 4

Water Connections

Hot outlet and cold inlet are 1-1/4" NPT dielectric nipples which prevent excessive turbulence of heated water and results in optimum tank draw.

Heavy Insulation

an effective blanket of insulation completely surrounds tanks to limit heat loss and assure high operating efficiency.

Stainless steel legs

6" stainless steel legs are provided with each unit.

Approximate Shipping Weight

110 lbs./50 kgs.

MODEL NUMBERS	INPUT KW
EG10-6-G	6
EG10-9-G	9
EG10-12-G	12
EG10-15-G	15
EG10-18-G	18

WATER TEMPERATURE RATINGS

MODEL NUMBER	TANK CAPACITY	THERMOSTAT TYPE	MINIMUM DELIVERED TEMPERATURE	MAXIMUM DELIVERED TEMPERATURE	HIGH TEMPERATURE LIMIT
EG10	10 Gal./ *38L*	Immersion	90°F / *32.2°C*	190°F / *87.8°C*	200°F / *93.3°C*

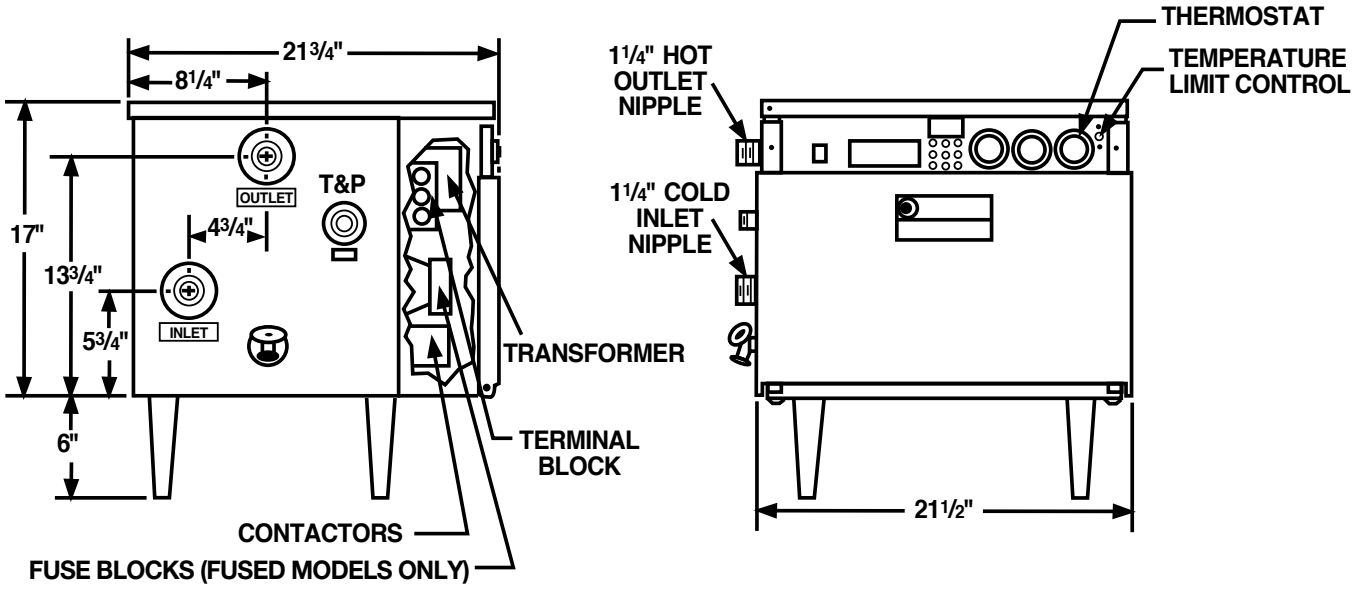

ELECTRICAL CHARACTERISTICS

INPUT KW	NO. OF ELEMENTS	ELE-MENT WAT-TAGE	FULL LOAD CURRENT IN AMPERES					Optional Fuse Models with Suffix "F" Number of Fuses 30A Class G		Number of Contactors		IMMERSION THERMOSTATS		
			208V Phase		240V Phase		600V Phase					Number of Thermostats	Optional Models – Fused with Suffix "F"	
			1	3	1	3	3	208/240V	600V	208/240V	600V		Number of Thermostats	KW Step Size
6	3	2000	29	17	25	14	N/A	6	N/A	2	N/A	1	N/A ONE THERMOSTAT STANDARD	6
9	3	3000	43	25	38	22	9	6	3	2	1	1		9
12	3	4000	58	33	50	29	12	6	3	2	1	1		12
15	3	5000	72	42	63	36	15	6	3	2	1	1		15
18	3	6000	87	50	75	43	18	6	3	2	1	1		18

RECOVERY CAPACITIES

Recovery in U.S. Gallons/Hr. (GPH) and Liters/Hr. (LPH) at Various Temperature Rises

INPUT KW	EQUIVALENT BTU/H	UNITS	40°F *(22°C)*	50°F *(28°C)*	60°F *(33°C)*	70°F *(39°C)*	80°F *(45°C)*	90°F *(50°C)*	100°F *(56°C)*	110°F *(61°C)*	120°F *(67°C)*	130°F *(72°C)*	140°F *(78°C)*
6	20,473	GPH	62	50	41	35	31	28	25	23	21	19	18
		LPH	*235*	*188*	*157*	*134*	*117*	*104*	*94*	*85*	*78*	*72*	*67*
9	30,710	GPH	93	74	62	53	47	41	37	34	31	29	27
		LPH	*352*	*282*	*235*	*201*	*176*	*157*	*141*	*128*	*117*	*108*	*101*
12	40,946	GPH	124	99	83	71	62	55	50	45	41	38	35
		LPH	*470*	*376*	*313*	*268*	*235*	*209*	*188*	*171*	*157*	*145*	*134*
15	51,183	GPH	155	124	103	89	78	69	62	56	52	48	44
		LPH	*587*	*470*	*391*	*335*	*294*	*261*	*235*	*213*	*196*	*181*	*168*
18	61,420	GPH	186	149	124	106	93	83	74	68	62	57	53
		LPH	*705*	*564*	*470*	*403*	*352*	*313*	*282*	*256*	*235*	*217*	*201*

Recommended Specifications

Water heater(s) shall be model _____, manufactured by Rheem, having electrical input of _____ kW and a recovery rate of _____ GPH at a 100°F temperature rise. Water heater(s) shall have a storage capacity of 10 gallons. Water heater(s) shall have the CSA seal of certification and be factory equipped with an CSA/ASME rated temperature and pressure relief valve. Tank(s) shall have a unique coating of high temperature porcelain enamel and furnished with magnesium anode rods rigidly supported. Water heater(s) shall meet or exceed the efficiency requirements of ASHRAE. Tank(s) shall have a working pressure rating of 150 psi, and shall be completely assembled. Water heater(s) shall be approve-listed and constructed in accordance with UL Sanitation (NSF5). Water heater(s) shall be equipped with “screw-in” type elements. Water heater(s) shall be constructed with a SYSTEM SENTINEL element diagnostic panel utilizing light emitting diodes. Each LED will correspond to the number and location of the heating elements and monitor their on-off function. Water heater(s) shall be provided with magnetic contactors, 240 volt control circuit transformer and immersion thermostat(s) with manual reset high limit control. 1-1/4" inlet and outlet water connections shall be provided. Water heater(s) shall be covered by a three year limited warranty against tank leaks.

In keeping with its policy of continuous progress and product improvement, Rheem reserves the right to make changes without notice.

Rheem Canada Ltd./Ltée • 125 Edgeware Road, Unit 1
Brampton, Ontario L6Y 0P5 • www.rheem.com

PRINTED IN U.S.A. 04/13 WP FORM NO. RR102CE-2CAN Rev. 4