RUUD

Rely on Ruud.™

SUBMITTAL COVER SHEET

PROJECT NAME _____

LOCATION _____

ARCHITECT _____

ENGINEER _____

CONTRACTOR _____

SUBMITTED BY _____ DATE _____

UNIT SUMMARY

Quantity						
Unit Designation						
Model No.						
Total Cooling						
Sensible Cooling						
Air Ent. Evaporator						
Air Lvg. Evaporator						
Heating Input						
Heating Output						
CFM/ESP						
EER/SEER						
Electrical						
Minimum Ampacity						
Min.-Max. Breaker						
Net Unit Weight						
Accessory						
Catalog Form Number						

ACCESSORIES:

NOTES:

PACKAGE AIR CONDITIONER:

RLNL-C Series
With ClearControl™
Nominal Sizes 6-12.5 Tons [21.1-44.0 kW]
RLNL-H Series
With ClearControl™
With VFD Technology
Nominal Sizes 7.5-12.5 Tons [26.4-44.0 kW]

R-410A

JOB NAME _____

CONTRACTOR _____

ENGINEER _____

LOCATION _____

ORDER NO. _____

SUBMITTED FOR ☐ APPROVAL ☐ RECORD

SUBMITTED BY _____

DATE _____

UNIT DESIGNATION _____

MODEL NO. _____

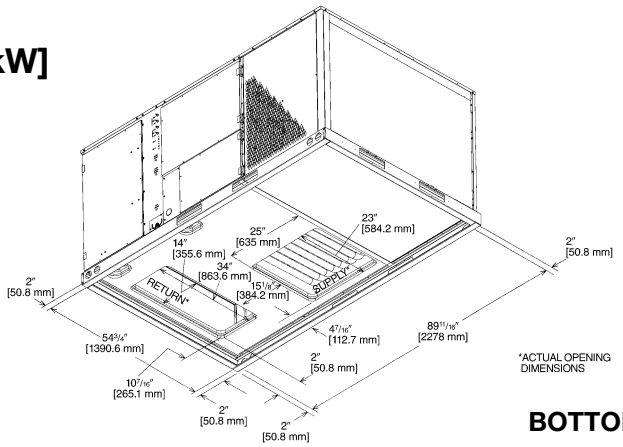

BOTTOM VIEW

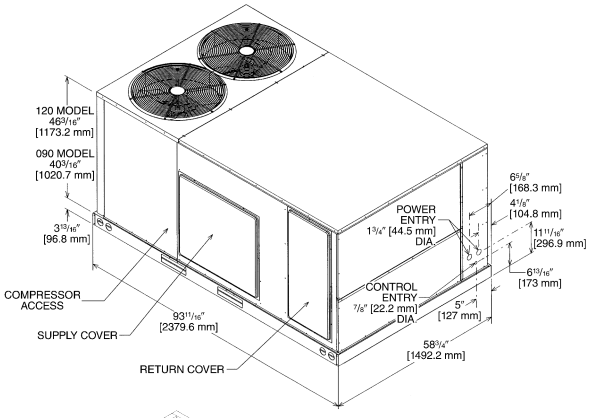

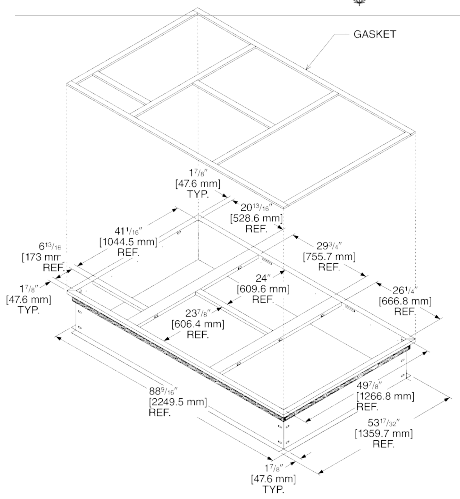

ROOFCURB INSTALLATION

Roofcurb Includes Insulation Panels

UNIT DATA

COOLING PERFORMANCE

TOTAL CAPACITY* ..... _____ MBH
SENSIBLE CAPACITY* ..... _____ MBH
EFFICIENCY (at AHRI)..... _____ EER
PART LOAD EFFICIENCY..... _____ EER
AMBIENT DB TEMP..... _____ °F
ENTERING DB TEMP ..... _____ °F
ENTERING WB TEMP ..... _____ °F
LEAVING DB TEMP ..... _____ °F
LEAVING WB TEMP ..... _____ °F
TOTAL POWER INPUT ..... _____ kW
ELEVATION ..... _____ FT
SOUND POWER ..... _____ DBELS

HEATING PERFORMANCE

ELECTRIC HEAT CAPACITY ..... _____ kW

SUPPLY AIR BLOWER PERFORMANCE

SUPPLY AIR..... _____ CFM [L/s]
OUTSIDE AIR..... _____ CFM [L/s]
EXTERNAL STATIC PRESSURE ..... _____ IWG
DUCT CONNECTION LOCATION ..... _____
BLOWER SPEED ..... _____ RPM
MOTOR RATING ..... _____ HP [W]
BRAKE HORSEPOWER ..... _____ BHP
POWER INPUT REQUIREMENT..... _____ kW

ELECTRICAL DATA

POWER SUPPLY..... _____ Hz
MINIMUM CIRCUIT AMPACITY..... _____ AMPS
MAXIMUM OVERCURRENT DEVICE
FUSE SIZE ..... _____ AMPS
HACR CIRCUIT BREAKER ..... _____ AMPS

DIMENSIONS & WEIGHT

HEIGHT____ IN WIDTH____ IN DEPTH ____ IN
TOTAL WEIGHT ..... _____ LBS [kg]
(including factory options)

CLEARANCES

FRONT 48" [1219 mm]	BACK 18" [457 mm]
BOTTOM 0"	TOP 60" [1524 mm]
LEFT SIDE 18" [457 mm]	36" [914 mm]
RIGHT SIDE (condenser end)	18" [457 mm]

[ ] Designates Metric Conversions

Accredited by the RvA
ISO 9001:2008
Certificate Number: 30164

c UL us LISTED

AHRI CERTIFIED™ www.ahridirectory.org
Unitary Large AC
AHRI Standard 340/360
Certification applies only when the complete system is listed with AHRI.

FEATURES FOR PACKAGE AIR CONDITIONERS
RLNL-C/H 6 THRU 12.5 NOMINAL TONS [21.1 THRU 44.0 kW]

Cooling

- R410A Refrigerant
- Quiet, Efficient, Scroll Compressors
- Two-Stage Cooling for Superior Comfort Control at Minimum Operating Cost on most models
- Belt-drive Blower with optional drive to accommodate design conditions as high as 2.0 inches [.37 kPa] of external static pressure at nominal airflow
- Copper Tube/Aluminum Fin Coils

Service Features

- 1/4 turn Fasteners and Hinged Access Panels for Convenience
- Large Control Panel with numbered and color coded wiring for Easy Troubleshooting
- Front Access, Slide-Out Blower Assembly for Easy Maintenance
- Convertible Airflow for Maximum Flexibility
- Solid-state microprocessor-based control board provides flexible control and extensive diagnostics for all unit functions
- Features a 16 x 2 character LCD display and a five-button keypad for local configuration and direct diagnosis of the system
- Slide out Condensate Drain pan to simplify Cleaning
- Factory-Installed two-inch [50.8 mm], throw away filters accessible without tools
- Plug-in Electrical Connections on outdoor fan assemblies
- Unit is prewired to accept Slip-In Economizer
- Externally-mounted refrigerant gauge ports
- Side or Base utility access minimizing roof penetrations
- Full perimeter, forkable, riggable baserails with protective forkboards for easy handling
- Complete Factory Tested, Charged, Wired
- Compatible with a third party building management system that supports the BACnet Application Specific Controller device profile
- Compatible with a third party building management system that supports the LonMark Space Comfort Controller (SCC) functional profile or LonMark Discharge Air Controller (DAC) functional profile

Reliability Features

- One-piece Top and Base pan on indoor section, One-inch [25.4 mm] raised flanges on supply/return opening for superior water management
- Base pan Insulation mounted on bottom helps eliminate corrosion and improves indoor air quality
- Non-Corrosive, sloped drain pan helps improve indoor air quality
- Insulation secured by adhesive *and* mechanical means
- Electrodeposition power-coat paint process guards against extreme weather conditions and withstands 1000-hour salt-spray test
- High and Low Refrigerant Pressure Switches
- Solid core refrigerant liquid line filters
- Available Comfort Alert® Module for power phase monitoring protection
- Models with VFD (Variable Frequency Drive) meet ASHRAE 90.1-2010 and California Title 24.

ACCESSORIES

Factory Installed

- Oversized Blower motor ..... ☐
- Outdoor Coil Guard ..... ☐
- Non-Powered Convenience Outlet ..... ☐
- Low Ambient w/Comfort Alert® Control ..... ☐
- Single Enthalpy Economizer w/Barometric Relief and DDC ..... ☐
- Single Enthalpy Economizer w/Barometric Relief, Smoke Detector and DDC ..... ☐

[ ] Designates Metric Conversions

Field Installed

- Electric Heater Kits ..... ☐
- Outdoor Coil Guard ..... ☐
- Non-Powered Convenience Outlet ..... ☐
- Low Ambient Control ..... ☐
- Comfort Alert® Control ..... ☐
- 14" Full Perimeter Roofcurb ..... ☐
- 24" Full Perimeter Roofcurb ..... ☐
- Roofcurb Adapter ..... ☐
- Concentric Diffuser ..... ☐
- Manual Outside Air Intake Damper ..... ☐
- Motorized Outside Air Intake ..... ☐
- Motorized Outside Air Intake Damper w/DDC Feedback ..... ☐
- Single Enthalpy Economizer w/Barometric Relief and DDC ..... ☐
- Single Enthalpy Economizer w/Barometric Relief, Smoke Detector and DDC ..... ☐
- Horizontal Single Enthalpy Economizer w/Barometric Relief and DDC ..... ☐
- Dual Enthalpy Adapter ..... ☐
- Power Exhaust ..... ☐
- CO_2 Sensor (wall mount with LCD) ..... ☐

Before proceeding with installation, refer to installation instructions packaged with each model, as well as complying with all Federal, State, Provincial, and Local codes, regulations, and practices.

Rheem Sales Company, Inc.
P.O. Box 17010, Fort Smith, AR 72917

"In keeping with its policy of continuous progress and product improvement, Rheem reserves the right to make changes without notice."

PRINTED IN U.S.A. 3-12 QG FORM NO. X33-1342