SUBMITTAL COVER SHEET

PROJECT NAME _____

LOCATION _____

ARCHITECT _____

ENGINEER _____

CONTRACTOR _____

SUBMITTED BY _____ DATE _____

UNIT SUMMARY

Quantity						
Unit Designation						
Model No.						
Total Cooling						
Sensible Cooling						
Air Ent. Evaporator						
Air Lvg. Evaporator						
Heating Input						
Heating Output						
CFM/ESP						
EER/SEER						
Electrical						
Minimum Ampacity						
Min.-Max. Breaker						
Net Unit Weight						
Accessory						
Catalog Form Number						

ACCESSORIES:

NOTES:

SUBMITTAL SHEET FOR PACKAGE AIR CONDITIONERS FEATURING EARTH-FRIENDLY R-410A REFRIGERANT
RSNL-B 13 SEER SERIES
RSPL-B 14 SEER SERIES

Nominal Sizes 2 thru 5 Tons [7.0 thru 17.0 kW]

JOB NAME _____ DATE _____

CONTRACTOR _____ UNIT DESIGNATION _____

ENGINEER _____ MODEL NO. _____

SUBMITTED FOR ☐ APPROVAL ☐ RECORD LOCATION _____

SUBMITTED BY _____ ORDER NO. _____

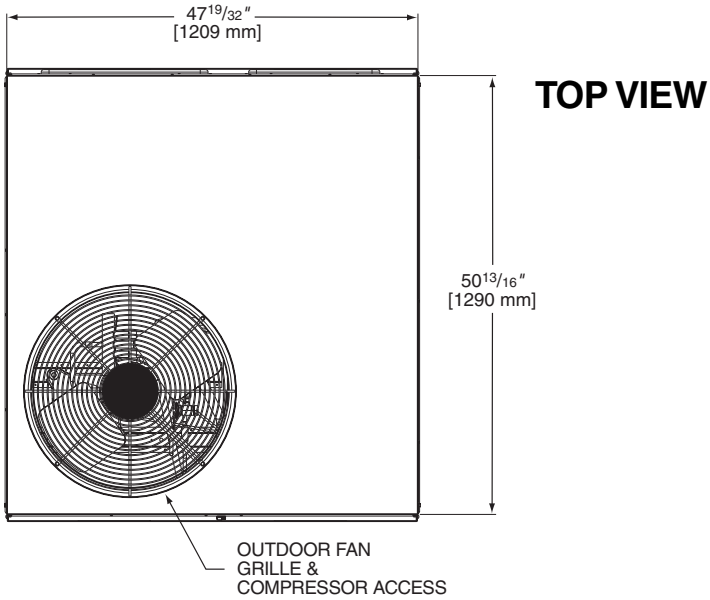

UNIT DATA

COOLING PERFORMANCE

TOTAL CAPACITY* ..... _____ MBH
SENSIBLE CAPACITY* ..... _____ MBH
OUTDOOR DESIGN TEMP. _____ °F [°C] DB/WB
TOTAL SUPPLY AIR ..... _____ CFM [L/s]
TEMP. OF AIR ENTERING EVAPORATOR COIL..... _____ °F [°C] DB/WB
POWER INPUT REQUIREMENT ..... _____ KW
SEER RATING..... _____
(*uses blower motor heat)

HEATING PERFORMANCE

ELECTRIC HEAT CAPACITY ..... _____ KW

SUPPLY AIR BLOWER PERFORMANCE

TOTAL SUPPLY AIR ..... _____ CFM [L/s]
TOTAL RESISTANCE EXTERNAL TO UNIT..... _____ IWG
BLOWER SPEED ..... _____ RPM
POWER OUTPUT REQUIREMENT .. _____ BHP
MOTOR RATING ..... _____ HP [W]
POWER INPUT REQUIREMENT ..... _____ KW

ELECTRICAL DATA

POWER SUPPLY 208-230V/1PH/60Hz
TOTAL UNIT AMPACITY..... _____ AMPS
MINIMUM WIRE SIZE ..... _____ AWG
MAXIMUM OVERCURRENT DEVICE FUSES HACR BREAKER ..... _____ AMPS

TOTAL UNIT WEIGHT

TOTAL OPERATING WEIGHT .... _____ LBS [kg]
(including field-installed accessories)

CLEARANCES

SIDE "A" (WITHOUT ECONOMIZER)	2" [50.8 mm]
SIDE "B" (WITHOUT ECONOMIZER)	12" [304.8 mm]
SIDE "C" (WITHOUT ECONOMIZER)	48" [1,219.2 mm]
SIDE "D" (WITHOUT ECONOMIZER)	24" [610 mm]
ABOVE UNIT (WITHOUT ECONOMIZER)	60" [1,524 mm]

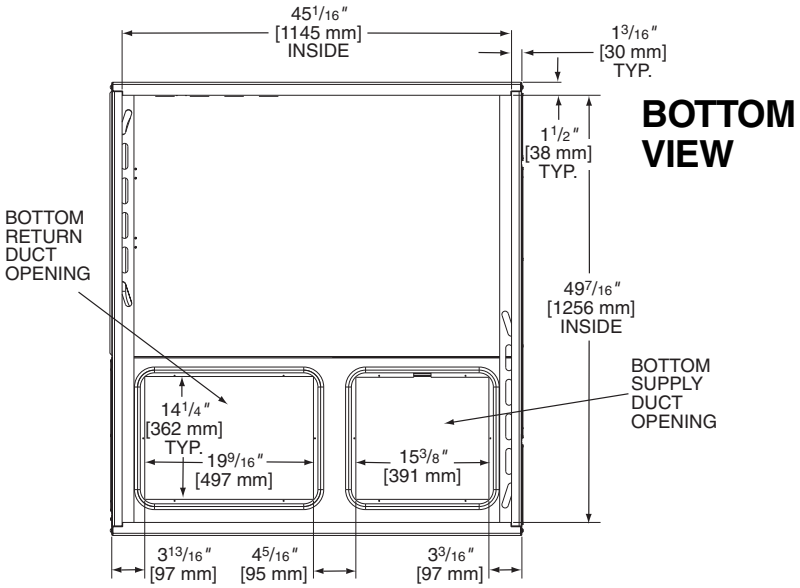

[ ] Designates Metric Conversions

FIELD INSTALLED ACCESSORIES

- Roof Curb (8" [203.2 mm], 14" [355.6 mm] & 24" [609.6 mm] High Full Platform) ☐
- Roof Curb (14" [355.6 mm & 24" [609.6 mm] Sloped Platform) ☐
- Filter Accessory ☐
- Lift Kit (For Rigging) ☐
- Time Delay Relay ☐
- Start Assist ☐
- Low Ambient Control ☐
- Low Pressure Control ☐
- Economizer (Enthalpy Controlled) Downflow Only ☐
- Manual Fresh Air Damper ☐
- L.P. (Propane) Kit ☐
- Transition (Rectangular-Round) Downflow/Sideflow ☐
- Concentric Diffuser and Grille ☐
- High Pressure Control ☐
- Thermostat ☐

[ ] Designates Metric Conversions

SIDE VIEW

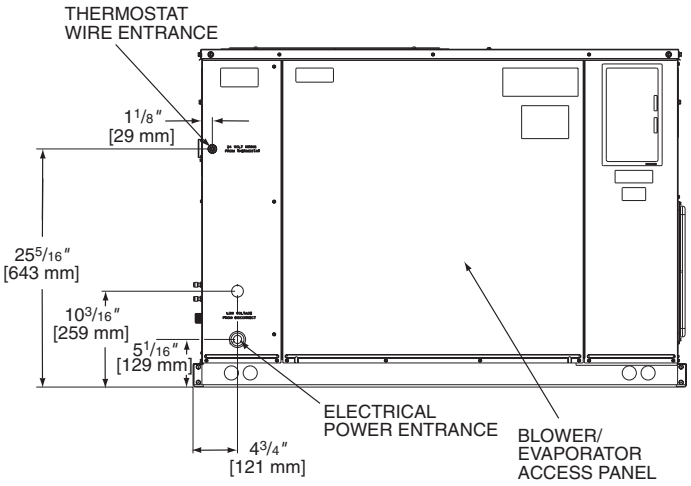

SIDE VIEW

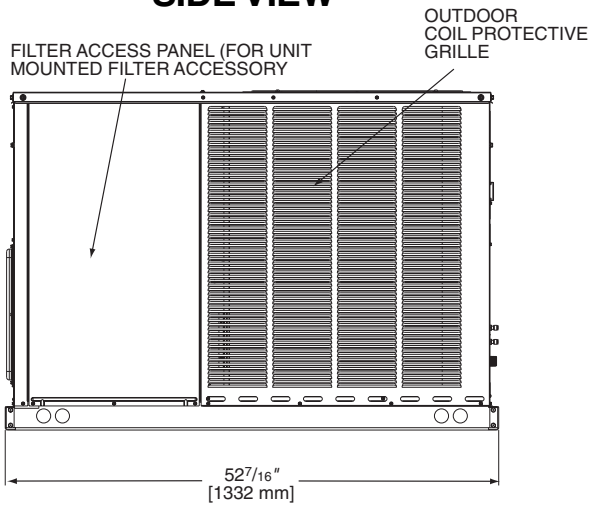

FRONT VIEW

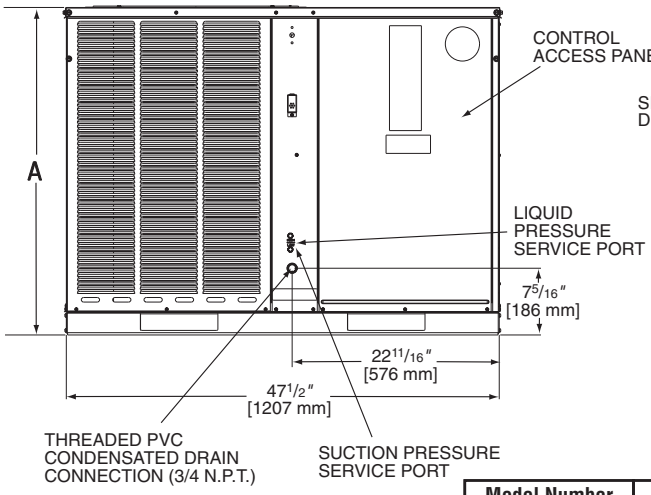

REAR VIEW

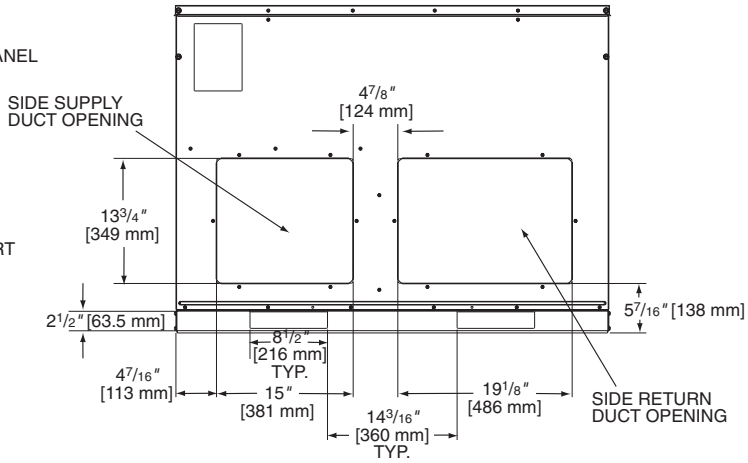

SHOWN WITH DUCT COVERS REMOVED.

Model Number	Height "A"
B024, B030, B036	35 15/16
B042, B048, B060	41

Before proceeding with installation, refer to installation instructions packaged with each model, as well as complying with all Federal, State, Provincial, and Local codes, regulations, and practices.

RHEEM
MANUFACTURING
COMPANY
5600 Old Greenwood Road, Fort Smith, Arkansas 72908

"In keeping with its policy of continuous progress and product improvement, Rheem reserves the right to make changes without notice."

PRINTED IN U.S.A. 2-06 DC FORM NO. X33-1232