FORM NO. A22-187 REV. 7
Supersedes Form No. A22-187 Rev. 6

CONDENSING UNITS

RUUD ULTRA® Series

UANL- JEZ R-410A

13 SEER Models
Nominal Sizes 2 to 5 Tons
[7.03 kW] to [17.6 kW]

Six Models
Cooling Capacities
23,200 to 62,000 BTU/HR
[6.80 kW] to [18.17 kW]

Equipped with *Comfort Control System™*

- Increased Reliability
- On-Board Diagnostics
- Fault Recall
- *Active Protection™*

The Ruud *Ultra Series™* High Efficiency UANL- JEZ Condensing Units were designed with performance in mind. These units offer comfort, energy conservation and dependability for single, multi-family and light commercial applications.

These units also contain the most advanced alternate refrigerant which contains no chlorofluorocarbons (CFCs), or hydrochlorofluorocarbons (HCFCs), or other compounds that may leak from air-conditioning systems and potentially harm the protective ozone layer of the Earth's atmosphere.

The Ruud *Ultra Series™* UANL- JEZ Condensing Units are the result of an ongoing development program for improved efficiencies. These units are flexible enough to achieve up to 15.00 SEER in specific match-ups, continuing a tradition of high efficiency.

- The *Comfort Control System™* provides on-board diagnostics and fault history for condensing units with single-phase compressors by detecting system and electrical problems without adding sensors. It can also communicate "fault codes" to enabled "L terminal" thermostats. The integrated diagnostics with *Active Protection™* prevents compressor operation when potentially harmful conditions are detected.
- 7-Segment LED Display is exclusive only to Ruud products. The information-display quickly and accurately shows technicians the source of malfunctions.
- Features a five-year conditional unit replacement warranty when properly installed with a new Ruud Air Handler OR Ruud Indoor Coil with a Ruud Gas Furnace.
- Compressor sound blanket is standard to provide quiet operation.
- Attractive, louvered wrap-around jacket protects the coil from yard hazards and weather extremes. Top grille is steel reinforced for extra strength. Cabinet is powder painted for all-weather protection.
- Air is discharged upward away from bushes and shrubs. The discharge pattern of the top grille provides minimum air restriction.
- Combination Grille/Motor Mount secures the motor to the underside of the discharge grille. The grille protects the motor windings and bearings from rain and snow.
- Removable top grille provides access to the condenser fan motor and condenser coil.
- Single speed 8-pole fan motor designed for low speed, quiet, energy-saving operation.
- All models meet or exceed a 1000-hour salt spray test per ASTM B117 Standard Practice for Operating Salt Spray Testing Apparatus.

Accredited by the RvA
ABS Quality Evaluations, Inc. Management System Certification
ANAB ACCREDITED
ISO 9001:2008
Certificate Number: 30164

ENERGUIDE
Seasonal Energy Efficiency Ratio (SEER)
THIS MODEL 13.0
13.0 — Uses least energy → 21.0

ENERGY STAR
13 SEER MODELS
(IN CERTAIN MATCHED SYSTEMS)

AHRI CERTIFIED™
www.ahridirectory.org
Unitary Small AC
AHRI Standard 210/240
Certification applies only when the complete system is listed with AHRI.

c UL us LISTED

"Proper sizing and installation of equipment is critical to achieve optimal performance. Split system air conditioners and heat pumps must be matched with appropriate coil components to meet ENERGY STAR criteria. Ask your Contractor for details or visit www.energystar.gov."

FEATURES & BENEFITS OF THE *COMFORT CONTROL SYSTEM*™

- **The Ruud exclusive 7-Segment LED Display easily shows system operating status codes and diagnostic codes.**
- **A Sealed Switch replaces the standard contactor and features optical control and latching mechanism.** The sealed switch prevents infiltration of insects and dust. A minimal switching arc, by the optical control, offers greater reliability. The latching mechanism consumes less power while reducing chatter.

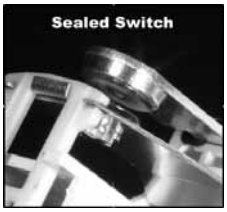

- **The Status Indication and System Diagnostics feature thermostat communication capability, built-in diagnostics, high & low voltage monitoring and high & low pressure switch monitoring.** The thermostat communication capability alerts the homeowner to any necessary service requirements. Faster, more accurate service is provided by the built-in diagnostics, by providing the HVAC professional with dependable information. With the high and low voltage monitoring feature, the control provides alerts for out-of-range conditions. In addition, high and low pressure-switch monitoring prevents the system from operating outside of its normal parameters.

- **The fault recall feature will allow for the last six fault-codes to be displayed, and will retain these codes even if power failure occurs.**
- **Built-in short-cycle protection allows the compressor to restart easily without oil removal.**
- **A 30-second minimum run-time for every compressor call enables the oil return to the compressor.**
- ***Active Protection* monitors the system to prevent nuisance lockouts and prevents compressor operation when potentially harmful conditions are detected.**
- **The compressor and fan are controlled independently, which reduces the starting load and light dimming.**
- **A push-button is offered to operate the compressor and fan for 5 seconds to allow for an operation check.**
- **In order to save time and money, replacement automotive fuses can be utilized instead of replacing the entire control board.**

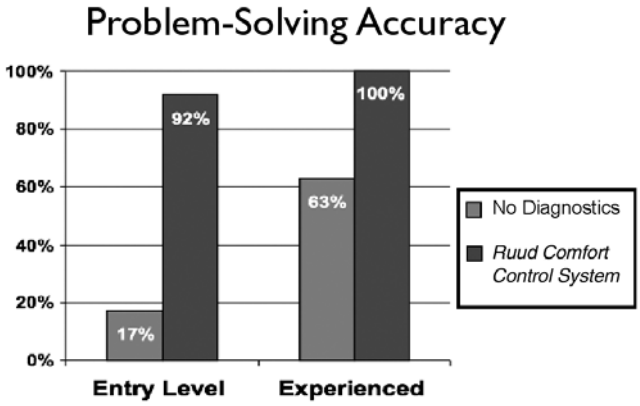

STANDARD FEATURES

UANL- JEZ Condensing Units

1. This unit contains a special scroll compressor that is designed specifically to operate with R-410A refrigerants and polyolester (POE) oils. The compressor is hermetically sealed and incorporates internal high temperature motor overload protection and durable insulation on the motor windings. It is externally mounted on rubber grommets to reduce vibration and noise.
2. Scroll compressor is hermetically sealed and incorporates internal high temperature motor overload protection, and durable insulation on the motor windings. It is externally mounted on rubber grommets to reduce vibration and noise.
3. Compressors have an internal pressure relief assembly to protect against excessive pressure differential.
4. All refrigerant connections are on the exterior of the unit, located close to the ground for neat appearing installations.
5. Cabinet is constructed of powder painted galvanized steel. The full wrap-around louvered grille protects the coil from damage.
6. Enhanced compressor sound blanket is standard.
7. Copper tube—aluminum fin coils are used on all models.
8. The control box is located in the top corner of the cabinet providing for easy access through a service panel.
9. Service valves are standard on all models.
10. Field connections for power and control wiring are kept separate.
11. Every unit is factory charged and run-tested.
12. Separate compressor compartment for easy service access.
13. Drawn, painted base pan for extra corrosion resistance and sound reduction.
14. The **UANL- JEZ** has a 10 year limited compressor warranty, plus a 5 year conditional unit replacement warranty. See General Terms of Limited Warranty for more information.
15. **Hard Start Kits**—Standard on all JEZ models.
16. Control Box Cover.
17. Automatic reset high and low pressure controls are standard on all JEZ models.
18. Liquid line filter drier is standard on all models (shipped – not installed).

SCROLL® COMPRESSOR

The scroll compressor is the key to efficiency for this Ruud model. It's the latest in high-efficiency compressor technology. The advanced scroll compressor offers low noise and vibration characteristics and features tolerance to liquid refrigerant and system contamination. The scroll compressor also has low start torque, eliminating start problems in the field. And its unique design enables the UANL- JEZ condensing unit to perform efficiently, quietly and dependably.

All controls and compressor are accessible for servicing by removal of the service panel.

Model Number Identification

U	A	N	L	—	024	J	E	Z
RUUD	REMOTE CONDENSING UNIT	N = 13 SEER	DESIGN SERIES L = R-410A		COOLING CAPACITY 024 = 24,000 BTU/HR [7.03 kW] 031 = 30,000 BTU/HR [8.79 kW] 037 = 36,000 BTU/HR [10.55 kW] 043 = 42,000 BTU/HR [12.31 kW] 049 = 48,000 BTU/HR [14.07 kW] 060 = 60,000 BTU/HR [17.58 kW]	ELECTRICAL DESIGNATION J = 208/230V-1-60	VARIATIONS EQUIPPED WITH THE *COMFORT CONTROL SYSTEM*™	COOLING CONNECTION FITTING Z = SWEAT W/SCROLL

Field Installed Accessories

- **Low Ambient Control**—Cycles outdoor fan to maintain adequate condensing pressures assuring liquid refrigerant flow to the coil. Allows indoor cooling with outdoor temperatures down to 0°F [–17.8°C]. (Model No. RXAD-A08)

  It is recommended that this control be installed in units to be operated at outdoor ambient temperatures under 70°F [21°C].
- **Thermostats**—

100-Series *
Non-Programmable

200-Series *
Programmable

300-Series *
Deluxe Programmable

400-Series *
Special Applications/ Programmable

500-Series *
Communicating/ Programmable

Brand	Unique Model Number Prefix		Descriptor (3 Characters)	Series (3 Characters)	System (2 Characters)	Type (2 Characters)
UHC		-	TST	101	GE	MS
UHC=Ruud			TST=Thermostat	100=Non-Programmable 200=Programmable 300=Deluxe Programmable 400=Special Applications/ Programmable 500=Communicating/ Programmable	GE=Gas/Oil/Electric HP=Heat Pump MD=Modulating Furnace DF=Dual Fuel UN=Universal AC/HP/GE CM=Communicating	SS=Single-Stage MS=Multi-Stage

** Photos are representative. Actual models may vary.*

For detailed thermostat match-up information, see specification sheet form number T22-001.

- **Compressor Crankcase Heater (CCH)**—While scroll compressors usually do not require crankcase heaters, there are instances when a heater should be added. Refrigerant migration during the off cycle can result in a noisy start up. Add a crankcase heater to minimize refrigeration migration, and to help eliminate any start up noise or bearing "wash out."

[ ] Designates Metric Conversions

Performance Data @ AHRI Standard Conditions—Cooling: UANL- JEZ

Model Numbers		80°F [26.5°C] DB/67°F [19.5°C] WB Indoor Air 95°F [35°C] DB Outdoor Air					Sound Rating dB	Indoor CFM [L/s]
Outdoor Unit UANL-	Indoor Coil and/or Air Handler	Total Capacity BTU/H [kW]	Net Sensible BTU/H [kW]	Net Latent BTU/H [kW]	EER	SEER		
Rev. 7/1/2010	RCFL-H*2417 ①	23,800 [7.0]	16,900 [5.0]	6,900 [2.0]	11.35	13.25	70	800 [378]
	RCFL-A*2414	23,800 [7.0]	16,900 [5.0]	6,900 [2.0]	11.35	13.25	70	800 [378]
	RCFL-A*2417	23,800 [7.0]	16,900 [5.0]	6,900 [2.0]	11.35	13.25	70	800 [378]
	RCFL-A*2417 (-GFD-06?MCK?)	24,400 [7.1]	17,350 [5.1]	7,050 [2.1]	12.05	14.00	70	800 [378]
	RCFL-A*2417 (-GFD-07?MCK?)	24,600 [7.2]	17,400 [5.1]	7,200 [2.1]	12.15	14.00	70	800 [378]
	RCFL-A*2417 (-GFE-06?MCK?)	24,000 [7.0]	16,750 [4.9]	7,250 [2.1]	11.90	14.00	70	725 [342]
	RCFL-A*2417 (-GFE-07?MCK?)	24,000 [7.0]	16,750 [4.9]	7,250 [2.1]	11.90	14.00	70	725 [342]
	RCFL-A*2417 (-GGD-06?MCK?)	24,600 [7.2]	17,450 [5.1]	7,150 [2.1]	12.30	14.00	70	800 [378]
	RCFL-A*2417 (-GGD-07?MCK?)	24,600 [7.2]	17,450 [5.1]	7,150 [2.1]	12.25	14.00	70	800 [378]
	RCFL-A*2417 (-GGE-06?MCK?)	24,400 [7.1]	17,350 [5.1]	7,050 [2.1]	11.95	14.00	70	825 [389]
	RCFL-A*2417 (-GGE-07?MCK?)	24,200 [7.1]	17,000 [5.0]	7,200 [2.1]	12.00	14.50	70	750 [354]
	RCFL-A*2417 (-GJF-06?MCK?)	24,400 [7.1]	17,350 [5.1]	7,050 [2.1]	11.95	14.00	70	825 [389]
	RCFL-A*2417 (-GLE-07?AMK?)	24,400 [7.1]	17,300 [5.1]	7,100 [2.1]	12.10	14.50	70	800 [378]
	RCFL-A*2417 (-GLR-07?AMK?)	24,600 [7.2]	17,500 [5.1]	7,100 [2.1]	12.50	14.00	70	800 [378]
	RCFL-A*2417 (RGLT-07?AME?)	24,800 [7.3]	17,800 [5.2]	7,000 [2.1]	12.00	14.50	70	850 [401]
	RCFL-A*2417 (-GPE-05?BMK?)	24,400 [7.1]	17,350 [5.1]	7,050 [2.1]	12.00	14.50	70	800 [378]
	RCFL-A*2417 (-GPE-07?AMK?)	24,000 [7.0]	16,700 [4.9]	7,300 [2.1]	12.05	14.50	70	725 [342]
	RCFL-A*2417 (-GPR-05?BMK?)	24,600 [7.2]	17,400 [5.1]	7,200 [2.1]	12.15	14.00	70	775 [366]
	RCFL-A*2417 (-GPR-07?AMK?)	24,600 [7.2]	17,500 [5.1]	7,100 [2.1]	12.40	14.00	70	800 [378]
	RCFL-A*2417 (RGPT-05?BMK?)	24,800 [7.3]	17,800 [5.2]	7,000 [2.1]	12.00	14.50	70	850 [401]
	RCFL-A*2417 (RGPT-07?AME?)	24,800 [7.3]	17,800 [5.2]	7,000 [2.1]	12.00	14.50	70	850 [401]
	RCFL-A*2417 (-GRM-04?MAE?)	24,400 [7.1]	17,300 [5.1]	7,100 [2.1]	12.10	14.00	70	800 [378]
	RCFL-A*2417 (-GRM-06?MAE?)	24,400 [7.1]	17,300 [5.1]	7,100 [2.1]	12.10	14.00	70	825 [389]
	RCFL-A*2417 (-GRM-07?MAE?)	24,600 [7.2]	17,650 [5.2]	6,950 [2.0]	11.85	14.00	70	850 [401]
	RCFL-A*2417 (-GTM-06?MAE?)	24,400 [7.1]	17,350 [5.1]	7,050 [2.1]	11.80	14.00	70	825 [389]
	ROCA-070E03 (RCFL-A*2417)	24,600 [7.2]	17,450 [5.1]	7,150 [2.1]	12.00	14.50	70	800 [378]
	ROCA-070E04 (RCFL-A*2417)	24,600 [7.2]	17,450 [5.1]	7,150 [2.1]	12.00	14.50	70	800 [378]
024JEZ	ROLA-070E03 (RCFL-A*2417)	24,600 [7.2]	17,450 [5.1]	7,150 [2.1]	12.00	14.50	70	800 [378]
	ROLA-070E04 (RCFL-A*2417)	24,200 [7.1]	16,850 [4.9]	7,350 [2.2]	12.00	14.50	70	725 [342]
	RCFL-H*2414	23,800 [7.0]	16,900 [5.0]	6,900 [2.0]	11.35	13.25	70	800 [378]
	RCFL-H*2417 (-GFD-06?MCK?)	24,400 [7.1]	17,350 [5.1]	7,050 [2.1]	12.05	14.00	70	800 [378]
	RCFL-H*2417 (-GFD-07?MCK?)	24,600 [7.2]	17,400 [5.1]	7,200 [2.1]	12.15	14.00	70	800 [378]
	RCFL-H*2417 (-GFE-06?MCK?)	24,000 [7.0]	16,750 [4.9]	7,250 [2.1]	11.90	14.00	70	725 [342]
	RCFL-H*2417 (-GFE-07?MCK?)	24,000 [7.0]	16,750 [4.9]	7,250 [2.1]	11.90	14.00	70	725 [342]
	RCFL-H*2417 (-GGD-06?MCK?)	24,600 [7.2]	17,450 [5.1]	7,150 [2.1]	12.30	14.00	70	800 [378]
	RCFL-H*2417 (-GGD-07?MCK?)	24,600 [7.2]	17,450 [5.1]	7,150 [2.1]	12.25	14.00	70	800 [378]
	RCFL-H*2417 (-GGE-06?MCK?)	24,400 [7.1]	17,350 [5.1]	7,050 [2.1]	11.95	14.00	70	825 [389]
	RCFL-H*2417 (-GGE-07?MCK?)	24,200 [7.1]	17,000 [5.0]	7,200 [2.1]	12.00	14.50	70	750 [354]
	RCFL-H*2417 (-GJD-06?MCK?)	24,600 [7.2]	17,450 [5.1]	7,150 [2.1]	12.30	14.00	70	800 [378]
	RCFL-H*2417 (-GJD-07?MCK?)	24,600 [7.2]	17,450 [5.1]	7,150 [2.1]	12.25	14.00	70	800 [378]
	RCFL-H*2417 (-GJF-06?MCK?)	24,400 [7.1]	17,350 [5.1]	7,050 [2.1]	11.95	14.00	70	825 [389]
	RCFL-H*2417 (-GJF-07?MCK?)	24,400 [7.1]	17,350 [5.1]	7,050 [2.1]	11.95	14.00	70	800 [378]
	RCFL-H*2417 (-GLE-07?AMK?)	24,400 [7.1]	17,300 [5.1]	7,100 [2.1]	12.10	14.50	70	800 [378]
	RCFL-H*2417 (-GLR-07?AMK?)	24,600 [7.2]	17,500 [5.1]	7,100 [2.1]	12.50	14.00	70	800 [378]
	RCFL-H*2417 (RGLT-07?AME?)	24,800 [7.3]	17,800 [5.2]	7,000 [2.1]	12.00	14.50	70	850 [401]
	RCFL-H*2417 (-GPE-05?BMK?)	24,400 [7.1]	17,350 [5.1]	7,050 [2.1]	12.00	14.50	70	800 [378]
	RCFL-H*2417 (-GPE-07?AMK?)	24,000 [7.0]	16,700 [4.9]	7,300 [2.1]	12.05	14.50	70	725 [342]
	RCFL-H*2417 (-GPR-05?BMK?)	24,600 [7.2]	17,400 [5.1]	7,200 [2.1]	12.15	14.00	70	775 [366]
	RCFL-H*2417 (-GPR-07?AMK?)	24,600 [7.2]	17,500 [5.1]	7,100 [2.1]	12.40	14.00	70	800 [378]
	RCFL-H*2417 (RGPT-05?BMK?)	24,800 [7.3]	17,800 [5.2]	7,000 [2.1]	12.00	14.50	70	850 [401]
	RCFL-H*2417 (RGPT-07?AME?)	24,800 [7.3]	17,800 [5.2]	7,000 [2.1]	12.00	14.50	70	850 [401]
	RCFL-H*2417 (-GRM-04?MAE?)	24,400 [7.1]	17,300 [5.1]	7,100 [2.1]	12.10	14.00	70	800 [378]
	RCFL-H*2417 (-GRM-06?MAE?)	24,400 [7.1]	17,300 [5.1]	7,100 [2.1]	12.10	14.00	70	825 [389]
	RCFL-H*2417 (-GRM-07?MAE?)	24,600 [7.2]	17,650 [5.2]	6,950 [2.0]	11.85	14.00	70	850 [401]
	RCFL-H*2417 (-GTM-06?MAE?)	24,400 [7.1]	17,350 [5.1]	7,050 [2.1]	11.80	14.00	70	825 [389]

① Highest sales volume tested combination required by D.O.E. test procedures.

[ ] Designates Metric Conversions

Performance Data @ AHRI Standard Conditions—Cooling: UANL- JEZ (continued)

Model Numbers		80°F [26.5°C] DB/67°F [19.5°C] WB Indoor Air 95°F [35°C] DB Outdoor Air					Sound Rating dB	Indoor CFM [L/s]
Outdoor Unit UANL-	Indoor Coil and/or Air Handler	Total Capacity BTU/H [kW]	Net Sensible BTU/H [kW]	Net Latent BTU/H [kW]	EER	SEER		
Rev. 7/1/2010	ROCA-070E03 (RCFL-H*2417)	24,600 [7.2]	17,450 [5.1]	7,150 [2.1]	12.00	14.50	70	800 [378]
	ROCA-070E04 (RCFL-H*2417)	24,600 [7.2]	17,450 [5.1]	7,150 [2.1]	12.00	14.50	70	800 [378]
	ROLA-070E03 (RCFL-H*2417)	24,600 [7.2]	17,450 [5.1]	7,150 [2.1]	12.00	14.50	70	800 [378]
	ROLA-070E04 (RCFL-H*2417)	24,200 [7.1]	16,850 [4.9]	7,350 [2.2]	12.00	14.50	70	725 [342]
	-BHP-17 (RCHL-24A2)	23,400 [6.9]	16,050 [4.7]	7,350 [2.2]	11.55	14.00	70	800 [378]
	RCQD-2417 (-GFE-06?MCK?)	24,800 [7.3]	17,650 [5.2]	7,150 [2.1]	12.30	14.50	70	725 [342]
	RCQD-2417 (-GFE-07?MCK?)	24,800 [7.3]	17,650 [5.2]	7,150 [2.1]	12.30	14.50	70	725 [342]
	RCQD-2417 (-GGE-06?MCK?)	25,200 [7.4]	18,250 [5.3]	6,950 [2.0]	12.40	14.50	70	825 [389]
	RCQD-2417 (-GJF-06?MCK?)	25,200 [7.4]	18,250 [5.3]	6,950 [2.0]	12.40	14.50	70	825 [389]
	RCQD-2417 (-GJF-07?MCK?)	25,200 [7.4]	18,300 [5.4]	6,900 [2.0]	12.35	14.50	70	800 [378]
	RCQD-2417 (-GPE-05?BMK?)	25,200 [7.4]	18,250 [5.3]	6,950 [2.0]	12.40	14.50	70	800 [378]
	RCQD-2417 (-GPE-07?AMK?)	25,200 [7.4]	18,250 [5.3]	6,950 [2.0]	12.30	14.50	70	825 [389]
	RCQD-2417 (RGPT-05?BMK?)	25,600 [7.5]	19,000 [5.6]	6,600 [1.9]	12.00	14.50	70	900 [425]
	ROCA-070E03 (RCQD-2417)	25,200 [7.4]	18,250 [5.3]	6,950 [2.0]	12.00	14.50	70	800 [378]
024JEZ	ROCA-070E04 (RCQD-2417)	25,200 [7.4]	18,250 [5.3]	6,950 [2.0]	12.00	14.50	70	800 [378]
	ROLA-070E03 (RCQD-2417)	25,200 [7.4]	18,250 [5.3]	6,950 [2.0]	12.00	14.50	70	800 [378]
	ROLA-070E04 (RCQD-2417)	24,800 [7.3]	17,650 [5.2]	7,150 [2.1]	12.00	14.50	70	725 [342]
	RCQD-2417A*	24,600 [7.2]	17,850 [5.2]	6,750 [2.0]	11.20	13.00	70	800 [378]
	RCQD-2417A* (-GFD-06?MCK?)	25,000 [7.3]	18,100 [5.3]	6,900 [2.0]	12.10	14.00	70	800 [378]
	RCQD-2417A* (-GFD-07?MCK?)	25,200 [7.4]	18,300 [5.4]	6,900 [2.0]	12.15	14.50	70	800 [378]
	RCQD-2417A* (-GJD-06?MCK?)	25,200 [7.4]	18,300 [5.4]	6,900 [2.0]	12.35	14.50	70	800 [378]
	RCQD-2417A* (-GJD-07?MCK?)	25,200 [7.4]	18,300 [5.4]	6,900 [2.0]	12.25	14.50	70	800 [378]
	RCQD-2417A* (-GPR-05?BMK?)	25,200 [7.4]	18,300 [5.4]	6,900 [2.0]	12.20	14.50	70	775 [366]
	RCQD-2417A* (-GPR-07?AMK?)	25,200 [7.4]	18,250 [5.3]	6,950 [2.0]	12.40	14.50	70	800 [378]
	RCQD-2417A* (-GRM-04?MAE?)	25,200 [7.4]	18,300 [5.4]	6,900 [2.0]	12.15	14.50	70	800 [378]
	RCQD-2417A* (-GRM-06?MAE?)	25,200 [7.4]	18,300 [5.4]	6,900 [2.0]	12.20	14.50	70	825 [389]
	RCQD-2417A* (-GRM-07?MAE?)	25,200 [7.4]	18,450 [5.4]	6,750 [2.0]	12.00	14.00	70	850 [401]
	-HKL-HM2417 (RCSL-H*2417)	24,800 [7.3]	17,650 [5.2]	7,150 [2.1]	12.45	14.00	70	850 [401]
	-HLL-HM2417 (RCSL-H*2417)	24,800 [7.3]	17,600 [5.2]	7,200 [2.1]	12.80	15.00	70	775 [366]
	-HSL-HM2417 (RCSL-H*2417)	24,200 [7.1]	17,250 [5.1]	6,950 [2.0]	11.65	13.00	70	800 [378]
	RCFL-H*3617 ①	28,800 [8.4]	21,150 [6.2]	7,650 [2.2]	10.95	13.00	71	1,000 [472]
	RCFL-A*3617	28,800 [8.4]	21,150 [6.2]	7,650 [2.2]	10.95	13.00	71	1,000 [472]
	RCFL-A*3617 (-GFD-07?MCK?)	29,200 [8.6]	21,450 [6.3]	7,750 [2.3]	11.40	13.50	71	1,000 [472]
	RCFL-A*3617 (-GFE-06?MCK?)	29,200 [8.6]	21,450 [6.3]	7,750 [2.3]	11.45	13.50	71	1,000 [472]
	RCFL-A*3617 (-GFE-07?MCK?)	29,000 [8.5]	21,300 [6.2]	7,700 [2.3]	11.35	13.00	71	1,025 [484]
	RCFL-A*3617 (-GGD-06?MCK?)	29,200 [8.6]	21,450 [6.3]	7,750 [2.3]	11.45	13.50	71	1,000 [472]
	RCFL-A*3617 (-GGD-07?MCK?)	29,000 [8.5]	21,300 [6.2]	7,700 [2.3]	11.35	13.50	71	1,025 [484]
	RCFL-A*3617 (-GGE-06?MCK?)	30,400 [8.9]	22,350 [6.5]	8,050 [2.4]	11.80	14.00	71	1,025 [484]
	RCFL-A*3617 (-GGE-07?MCK?)	29,200 [8.6]	21,450 [6.3]	7,750 [2.3]	11.50	13.50	71	1,025 [484]
	RCFL-A*3617 (-GJF-06?MCK?)	30,400 [8.9]	22,350 [6.5]	8,050 [2.4]	11.80	14.00	71	1,025 [484]
	RCFL-A*3617 (-GLE-07?AMK?)	30,400 [8.9]	22,300 [6.5]	8,100 [2.4]	11.95	14.00	71	1,025 [484]
	RCFL-A*3617 (-GLR-07?AMK?)	29,200 [8.6]	21,450 [6.3]	7,750 [2.3]	11.65	13.50	71	1,025 [484]
031JEZ	RCFL-A*3617 (RGLT-07?AME?)	28,800 [8.4]	20,550 [6.0]	8,250 [2.4]	11.50	14.00	71	875 [413]
	RCFL-A*3617 (-GPE-05?BMK?)	29,200 [8.6]	21,450 [6.3]	7,750 [2.3]	11.60	13.50	71	975 [460]
	RCFL-A*3617 (-GPE-07?AMK?)	29,200 [8.6]	21,450 [6.3]	7,750 [2.3]	11.65	13.50	71	1,000 [472]
	RCFL-A*3617 (-GPR-07?AMK?)	29,200 [8.6]	21,450 [6.3]	7,750 [2.3]	11.65	13.50	71	1,000 [472]
	RCFL-A*3617 (RGPT-05?BMK?)	28,600 [8.4]	20,250 [5.9]	8,350 [2.4]	11.50	14.00	71	850 [401]
	RCFL-A*3617 (RGPT-07?AME?)	28,800 [8.4]	20,550 [6.0]	8,250 [2.4]	11.50	14.00	71	875 [413]
	RCFL-A*3617 (-GRM-04?MAE?)	29,000 [8.5]	21,300 [6.2]	7,700 [2.3]	11.20	13.00	71	1,025 [484]
	RCFL-A*3617 (-GRM-06?MAE?)	29,000 [8.5]	21,300 [6.2]	7,700 [2.3]	11.35	13.50	71	1,000 [472]
	RCFL-A*3617 (-GRM-07?MAE?)	28,400 [8.3]	20,100 [5.9]	8,300 [2.4]	11.45	13.50	71	850 [401]
	RCFL-A*3617 (-GRM-07?YBG?)	29,000 [8.5]	21,300 [6.2]	7,700 [2.3]	11.15	13.00	71	975 [460]
	RCFL-A*3617 (-GTM-06?MAE?)	30,000 [8.8]	21,500 [6.3]	8,500 [2.5]	12.00	14.00	71	900 [425]
	ROCA-070E03 (RCFL-A*3617)	29,200 [8.6]	21,400 [6.3]	7,800 [2.3]	11.50	13.50	71	1,000 [472]
	ROCA-070E04 (RCFL-A*3617)	29,200 [8.6]	21,400 [6.3]	7,800 [2.3]	11.50	13.50	71	1,000 [472]

① Highest sales volume tested combination required by D.O.E. test procedures.

[ ] Designates Metric Conversions

Performance Data @ AHRI Standard Conditions—Cooling: UANL- JEZ (continued)

Model Numbers		80°F [26.5°C] DB/67°F [19.5°C] WB Indoor Air 95°F [35°C] DB Outdoor Air					Sound Rating dB	Indoor CFM [L/s]
Outdoor Unit UANL-	Indoor Coil and/or Air Handler	Total Capacity BTU/H [kW]	Net Sensible BTU/H [kW]	Net Latent BTU/H [kW]	EER	SEER		
Rev. 7/1/2010	ROLA-070E03 (RCFL-A*3617)	29,400 [8.6]	21,600 [6.3]	7,800 [2.3]	11.50	14.00	71	975 [460]
	ROLA-070E04 (RCFL-A*3617)	29,400 [8.6]	21,600 [6.3]	7,800 [2.3]	11.50	14.00	71	975 [460]
	RCFL-A*3621	28,800 [8.4]	21,150 [6.2]	7,650 [2.2]	10.95	13.00	71	1,000 [472]
	RCFL-A*3621 (-GFD-07?MCK?)	29,200 [8.6]	21,450 [6.3]	7,750 [2.3]	11.45	13.50	71	1,000 [472]
	RCFL-A*3621 (-GFE-06?MCK?)	30,400 [8.9]	22,350 [6.5]	8,050 [2.4]	11.70	13.50	71	1,000 [472]
	RCFL-A*3621 (-GFE-07?MCK?)	30,200 [8.8]	22,150 [6.5]	8,050 [2.4]	11.65	13.50	71	1,025 [484]
	RCFL-A*3621 (-GFE-09?ZCM?)	30,600 [9.0]	22,500 [6.6]	8,100 [2.4]	12.10	14.00	71	975 [460]
	RCFL-A*3621 (-GFE-10?ZCM?)	30,600 [9.0]	22,500 [6.6]	8,100 [2.4]	12.05	14.00	71	1,000 [472]
	RCFL-A*3621 (-GGD-06?MCK?)	29,200 [8.6]	21,450 [6.3]	7,750 [2.3]	11.50	13.50	71	1,000 [472]
	RCFL-A*3621 (-GGD-07?MCK?)	29,200 [8.6]	21,450 [6.3]	7,750 [2.3]	11.40	13.50	71	1,025 [484]
	RCFL-A*3621 (-GGE-06?MCK?)	30,400 [8.9]	22,350 [6.5]	8,050 [2.4]	11.85	14.00	71	1,025 [484]
	RCFL-A*3621 (-GGE-07?MCK?)	30,400 [8.9]	22,350 [6.5]	8,050 [2.4]	11.80	14.00	71	1,025 [484]
	RCFL-A*3621 (-GGE-09?ZCM?)	30,600 [9.0]	22,500 [6.6]	8,100 [2.4]	12.15	14.00	71	1,000 [472]
	RCFL-A*3621 (-GGE-10?ZCM?)	30,800 [9.0]	22,900 [6.7]	7,900 [2.3]	12.00	14.00	71	1,050 [495]
	RCFL-A*3621 (-GJF-06?MCK?)	30,400 [8.9]	22,350 [6.5]	8,050 [2.4]	11.85	14.00	71	1,025 [484]
	RCFL-A*3621 (-GLE-07?AMK?)	30,400 [8.9]	22,300 [6.5]	8,100 [2.4]	12.00	14.00	71	1,025 [484]
	RCFL-A*3621 (RGLE-07?BRQ?)	30,600 [9.0]	22,450 [6.6]	8,150 [2.4]	12.20	14.50	71	1,025 [484]
	RCFL-A*3621 (-GLE-10?BRM?)	31,000 [9.1]	23,050 [6.8]	7,950 [2.3]	12.35	14.50	71	1,050 [495]
	RCFL-A*3621 (-GLR-07?AMK?)	29,200 [8.6]	21,400 [6.3]	7,800 [2.3]	11.70	13.50	71	1,025 [484]
	RCFL-A*3621 (-GLR-07?BRQ?)	29,400 [8.6]	21,600 [6.3]	7,800 [2.3]	12.00	14.00	71	1,000 [472]
	RCFL-A*3621 (RGLT-07?AME?)	28,800 [8.4]	20,550 [6.0]	8,250 [2.4]	11.50	14.00	71	875 [413]
	RCFL-A*3621 (RGLT-07?BRQ?)	29,600 [8.7]	21,750 [6.4]	7,850 [2.3]	11.50	14.00	71	975 [460]
	RCFL-A*3621 (RGLT-10?BRM?)	29,600 [8.7]	21,750 [6.4]	7,850 [2.3]	12.00	14.50	71	975 [460]
	RCFL-A*3621 (-GPE-05?BMK?)	30,400 [8.9]	22,300 [6.5]	8,100 [2.4]	11.90	14.00	71	975 [460]
	RCFL-A*3621 (-GPE-07?AMK?)	30,400 [8.9]	22,300 [6.5]	8,100 [2.4]	11.95	14.00	71	1,000 [472]
	RCFL-A*3621 (-GPE-07?BRQ?)	30,800 [9.0]	22,850 [6.7]	7,950 [2.3]	12.20	14.50	71	1,050 [495]
	RCFL-A*3621 (-GPE-10?BRM?)	30,200 [8.8]	21,650 [6.3]	8,550 [2.5]	12.35	14.50	71	900 [425]
031JEZ	RCFL-A*3621 (-GPR-05?BMK?)	29,000 [8.5]	21,250 [6.2]	7,750 [2.3]	11.40	13.50	71	1,000 [472]
	RCFL-A*3621 (-GPR-07?AMK?)	29,200 [8.6]	21,450 [6.3]	7,750 [2.3]	11.70	13.50	71	1,000 [472]
	RCFL-A*3621 (-GPR-07?BRQ?)	29,400 [8.6]	21,550 [6.3]	7,850 [2.3]	12.05	14.00	71	1,000 [472]
	RCFL-A*3621 (RGPT-05?BMK?)	28,800 [8.4]	20,550 [6.0]	8,250 [2.4]	11.50	14.00	71	875 [413]
	RCFL-A*3621 (RGPT-07?AME?)	28,800 [8.4]	20,550 [6.0]	8,250 [2.4]	11.50	14.00	71	875 [413]
	RCFL-A*3621 (RGPT-07?BRQ?)	29,600 [8.7]	21,750 [6.4]	7,850 [2.3]	12.00	14.50	71	975 [460]
	RCFL-A*3621 (RGPT-10?BRM?)	29,600 [8.7]	21,750 [6.4]	7,850 [2.3]	12.00	14.50	71	975 [460]
	RCFL-A*3621 (-GRM-04?MAE?)	29,000 [8.5]	21,300 [6.2]	7,700 [2.3]	11.25	13.00	71	1,025 [484]
	RCFL-A*3621 (-GRM-06?MAE?)	29,000 [8.5]	21,250 [6.2]	7,750 [2.3]	11.40	13.50	71	1,000 [472]
	RCFL-A*3621 (-GRM-07?MAE?)	28,800 [8.4]	21,150 [6.2]	7,650 [2.2]	11.00	13.00	71	1,025 [484]
	RCFL-A*3621 (-GRM-07?YBG?)	29,000 [8.5]	21,300 [6.2]	7,700 [2.3]	11.20	13.00	71	975 [460]
	RCFL-A*3621 (-GTM-06?MAE?)	30,000 [8.8]	21,500 [6.3]	8,500 [2.5]	12.05	14.00	71	900 [425]
	RCFL-A*3621 (-GTM-07?RBG?)	31,000 [9.1]	23,400 [6.9]	7,600 [2.2]	12.00	14.00	71	1,125 [531]
	RCFL-A*3621 (-GTM-09?ZAJ?)	30,600 [9.0]	22,450 [6.6]	8,150 [2.4]	12.25	14.50	71	975 [460]
	ROCA-070E03 (RCFL-A*3621)	29,400 [8.6]	21,600 [6.3]	7,800 [2.3]	11.50	14.00	71	1,000 [472]
	ROCA-070E04 (RCFL-A*3621)	29,400 [8.6]	21,600 [6.3]	7,800 [2.3]	11.50	14.00	71	1,000 [472]
	ROLA-070E03 (RCFL-A*3621)	29,400 [8.6]	21,600 [6.3]	7,800 [2.3]	11.50	14.00	71	975 [460]
	ROLA-070E04 (RCFL-A*3621)	29,400 [8.6]	21,600 [6.3]	7,800 [2.3]	11.50	14.00	71	1,025 [484]
	ROLA-115E05 (RCFL-A*3621)	29,000 [8.5]	20,800 [6.1]	8,200 [2.4]	11.50	14.00	71	900 [425]
	RCFL-H*3617 (-GFD-07?MCK?)	29,200 [8.6]	21,450 [6.3]	7,750 [2.3]	11.40	13.50	71	1,000 [472]
	RCFL-H*3617 (-GFE-06?MCK?)	30,200 [8.8]	22,150 [6.5]	8,050 [2.4]	11.65	13.50	71	1,000 [472]
	RCFL-H*3617 (-GFE-07?MCK?)	30,200 [8.8]	22,150 [6.5]	8,050 [2.4]	11.55	13.50	71	1,025 [484]
	RCFL-H*3617 (-GGD-06?MCK?)	29,200 [8.6]	21,450 [6.3]	7,750 [2.3]	11.45	13.50	71	1,000 [472]
	RCFL-H*3617 (-GGD-07?MCK?)	29,000 [8.5]	21,300 [6.2]	7,700 [2.3]	11.35	13.50	71	1,025 [484]
	RCFL-H*3617 (-GGE-06?MCK?)	30,400 [8.9]	22,350 [6.5]	8,050 [2.4]	11.80	14.00	71	1,025 [484]
	RCFL-H*3617 (-GGE-07?MCK?)	30,400 [8.9]	22,350 [6.5]	8,050 [2.4]	11.75	13.50	71	1,025 [484]
	RCFL-H*3617 (-GJD-06?MCK?)	29,200 [8.6]	21,450 [6.3]	7,750 [2.3]	11.45	13.50	71	1,000 [472]
	RCFL-H*3617 (-GJD-07?MCK?)	29,000 [8.5]	21,300 [6.2]	7,700 [2.3]	11.35	13.50	71	1,025 [484]

① Highest sales volume tested combination required by D.O.E. test procedures.

[ ] Designates Metric Conversions

Performance Data @ AHRI Standard Conditions—Cooling: UANL- JEZ (continued)

Model Numbers		80°F [26.5°C] DB/67°F [19.5°C] WB Indoor Air 95°F [35°C] DB Outdoor Air					Sound Rating dB	Indoor CFM [L/s]
Outdoor Unit UANL-	Indoor Coil and/or Air Handler	Total Capacity BTU/H [kW]	Net Sensible BTU/H [kW]	Net Latent BTU/H [kW]	EER	SEER		
Rev. 7/1/2010	RCFL-H*3617 (-GJF-06?MCK?)	30,400 [8.9]	22,350 [6.5]	8,050 [2.4]	11.80	14.00	71	1,025 [484]
	RCFL-H*3617 (-GJF-07?MCK?)	29,800 [8.7]	21,250 [6.2]	8,550 [2.5]	11.90	14.00	71	875 [413]
	RCFL-H*3617 (-GLE-07?AMK?)	30,400 [8.9]	22,300 [6.5]	8,100 [2.4]	11.95	14.00	71	1,025 [484]
	RCFL-H*3617 (-GLR-07?AMK?)	29,200 [8.6]	21,450 [6.3]	7,750 [2.3]	11.65	13.50	71	1,025 [484]
	RCFL-H*3617 (RGLT-07?AME?)	28,800 [8.4]	20,550 [6.0]	8,250 [2.4]	11.50	14.00	71	875 [413]
	RCFL-H*3617 (-GPE-05?BMK?)	30,400 [8.9]	22,300 [6.5]	8,100 [2.4]	11.85	14.00	71	975 [460]
	RCFL-H*3617 (-GPE-07?AMK?)	30,400 [8.9]	22,300 [6.5]	8,100 [2.4]	11.90	14.00	71	1,000 [472]
	RCFL-H*3617 (-GPR-07?AMK?)	29,200 [8.6]	21,450 [6.3]	7,750 [2.3]	11.65	13.50	71	1,000 [472]
	RCFL-H*3617 (RGPT-05?BMK?)	28,600 [8.4]	20,250 [5.9]	8,350 [2.4]	11.50	14.00	71	850 [401]
	RCFL-H*3617 (RGPT-07?AME?)	28,800 [8.4]	20,550 [6.0]	8,250 [2.4]	11.50	14.00	71	875 [413]
	RCFL-H*3617 (-GRM-04?MAE?)	29,000 [8.5]	21,300 [6.2]	7,700 [2.3]	11.20	13.00	71	1,025 [484]
	RCFL-H*3617 (-GRM-06?MAE?)	29,000 [8.5]	21,300 [6.2]	7,700 [2.3]	11.35	13.50	71	1,000 [472]
	RCFL-H*3617 (-GRM-07?MAE?)	28,400 [8.3]	20,100 [5.9]	8,300 [2.4]	11.45	13.50	71	850 [401]
	RCFL-H*3617 (-GRM-07?YBG?)	29,000 [8.5]	21,300 [6.2]	7,700 [2.3]	11.15	13.00	71	975 [460]
	RCFL-H*3617 (-GTM-06?MAE?)	30,000 [8.8]	21,500 [6.3]	8,500 [2.5]	12.00	14.00	71	900 [425]
	ROCA-070E03 (RCFL-H*3617)	29,200 [8.6]	21,400 [6.3]	7,800 [2.3]	11.50	13.50	71	1,000 [472]
	ROCA-070E04 (RCFL-H*3617)	29,200 [8.6]	21,400 [6.3]	7,800 [2.3]	11.50	13.50	71	1,000 [472]
	ROLA-070E03 (RCFL-H*3617)	29,400 [8.6]	21,600 [6.3]	7,800 [2.3]	11.50	14.00	71	975 [460]
	ROLA-070E04 (RCFL-H*3617)	29,400 [8.6]	21,600 [6.3]	7,800 [2.3]	11.50	14.00	71	975 [460]
	RCFL-H*3621	28,800 [8.4]	21,150 [6.2]	7,650 [2.2]	10.95	13.00	71	1,000 [472]
	RCFL-H*3621 (-GFD-07?MCK?)	29,200 [8.6]	21,450 [6.3]	7,750 [2.3]	11.45	13.50	71	1,000 [472]
	RCFL-H*3621 (-GFE-06?MCK?)	30,400 [8.9]	22,350 [6.5]	8,050 [2.4]	11.70	13.50	71	1,000 [472]
	RCFL-H*3621 (-GFE-07?MCK?)	30,200 [8.8]	22,150 [6.5]	8,050 [2.4]	11.65	13.50	71	1,025 [484]
	RCFL-H*3621 (-GFE-09?ZCM?)	30,600 [9.0]	22,500 [6.6]	8,100 [2.4]	12.10	14.00	71	975 [460]
	RCFL-H*3621 (-GFE-10?ZCM?)	30,600 [9.0]	22,500 [6.6]	8,100 [2.4]	12.05	14.00	71	1,000 [472]
	RCFL-H*3621 (-GGD-06?MCK?)	29,200 [8.6]	21,450 [6.3]	7,750 [2.3]	11.50	13.50	71	1,000 [472]
	RCFL-H*3621 (-GGD-07?MCK?)	29,200 [8.6]	21,450 [6.3]	7,750 [2.3]	11.40	13.50	71	1,025 [484]
031JEZ	RCFL-H*3621 (-GGE-06?MCK?)	30,400 [8.9]	22,350 [6.5]	8,050 [2.4]	11.85	14.00	71	1,025 [484]
	RCFL-H*3621 (-GJD-06?MCK?)	29,200 [8.6]	21,450 [6.3]	7,750 [2.3]	11.50	13.50	71	1,000 [472]
	RCFL-H*3621 (-GJD-07?MCK?)	29,200 [8.6]	21,450 [6.3]	7,750 [2.3]	11.40	13.50	71	1,025 [484]
	RCFL-H*3621 (-GJF-06?MCK?)	30,400 [8.9]	22,350 [6.5]	8,050 [2.4]	11.85	14.00	71	1,025 [484]
	RCFL-H*3621 (-GJF-07?MCK?)	30,400 [8.9]	22,350 [6.5]	8,050 [2.4]	11.80	14.00	71	1,025 [484]
	RCFL-H*3621 (-GJF-09?ZCM?)	30,400 [8.9]	22,300 [6.5]	8,100 [2.4]	12.00	14.00	71	1,025 [484]
	RCFL-H*3621 (-GJF-10?ZCM?)	30,800 [9.0]	22,900 [6.7]	7,900 [2.3]	12.00	14.00	71	1,050 [495]
	RCFL-H*3621 (RGLE-07?AMK?)	30,400 [8.9]	22,300 [6.5]	8,100 [2.4]	12.00	14.00	71	1,025 [484]
	RCFL-H*3621 (RGLE-07?BRQ?)	30,600 [9.0]	22,450 [6.6]	8,150 [2.4]	12.20	14.50	71	1,025 [484]
	RCFL-H*3621 (-GLE-10?BRM?)	31,000 [9.1]	23,050 [6.8]	7,950 [2.3]	12.35	14.50	71	1,050 [495]
	RCFL-H*3621 (-GLR-07?AMK?)	29,200 [8.6]	21,400 [6.3]	7,800 [2.3]	11.70	13.50	71	1,025 [484]
	RCFL-H*3621 (-GLR-07?BRQ?)	29,400 [8.6]	21,600 [6.3]	7,800 [2.3]	12.00	14.00	71	1,000 [472]
	RCFL-H*3621 (RGLT-07?AME?)	28,800 [8.4]	20,550 [6.0]	8,250 [2.4]	11.50	14.00	71	875 [413]
	RCFL-H*3621 (RGLT-07?BRQ?)	29,600 [8.7]	21,750 [6.4]	7,850 [2.3]	11.50	14.00	71	975 [460]
	RCFL-H*3621 (RGLT-10?BRM?)	29,600 [8.7]	21,750 [6.4]	7,850 [2.3]	12.00	14.50	71	975 [460]
	RCFL-H*3621 (-GPE-05?BMK?)	30,400 [8.9]	22,300 [6.5]	8,100 [2.4]	11.90	14.00	71	975 [460]
	RCFL-H*3621 (-GPE-07?AMK?)	30,400 [8.9]	22,300 [6.5]	8,100 [2.4]	11.95	14.00	71	1,000 [472]
	RCFL-H*3621 (-GPE-07?BRQ?)	30,800 [9.0]	22,850 [6.7]	7,950 [2.3]	12.20	14.50	71	1,050 [495]
	RCFL-H*3621 (-GPE-10?BRM?)	31,000 [9.1]	23,150 [6.8]	7,850 [2.3]	12.30	14.50	71	1,075 [507]
	RCFL-H*3621 (-GPR-05?BMK?)	29,000 [8.5]	21,250 [6.2]	7,750 [2.3]	11.40	13.50	71	1,000 [472]
	RCFL-H*3621 (-GPR-07?AMK?)	29,200 [8.6]	21,450 [6.3]	7,750 [2.3]	11.70	13.50	71	1,000 [472]
	RCFL-H*3621 (-GPR-07?BRQ?)	29,400 [8.6]	21,550 [6.3]	7,850 [2.3]	12.05	14.00	71	1,000 [472]
	RCFL-H*3621 (RGPT-05?BMK?)	28,800 [8.4]	20,550 [6.0]	8,250 [2.4]	11.50	14.00	71	875 [413]
	RCFL-H*3621 (RGPT-07?AME?)	28,800 [8.4]	20,550 [6.0]	8,250 [2.4]	11.50	14.00	71	875 [413]
	RCFL-H*3621 (RGPT-07?BRQ?)	29,600 [8.7]	21,750 [6.4]	7,850 [2.3]	12.00	14.50	71	975 [460]
	RCFL-H*3621 (RGPT-10?BRM?)	29,600 [8.7]	21,750 [6.4]	7,850 [2.3]	12.00	14.50	71	975 [460]
	RCFL-H*3621 (-GRM-04?MAE?)	29,000 [8.5]	21,300 [6.2]	7,700 [2.3]	11.25	13.00	71	1,025 [484]
	RCFL-H*3621 (-GRM-06?MAE?)	29,000 [8.5]	21,250 [6.2]	7,750 [2.3]	11.40	13.50	71	1,000 [472]

① Highest sales volume tested combination required by D.O.E. test procedures.

[ ] Designates Metric Conversions

Performance Data @ AHRI Standard Conditions—Cooling: UANL- JEZ (continued)

Model Numbers		80°F [26.5°C] DB/67°F [19.5°C] WB Indoor Air 95°F [35°C] DB Outdoor Air					Sound Rating dB	Indoor CFM [L/s]
Outdoor Unit UANL-	Indoor Coil and/or Air Handler	Total Capacity BTU/H [kW]	Net Sensible BTU/H [kW]	Net Latent BTU/H [kW]	EER	SEER		
Rev. 7/1/2010	RCFL-H*3621 (-GRM-07?MAE?)	28,800 [8.4]	21,150 [6.2]	7,650 [2.2]	11.00	13.00	71	1,025 [484]
	RCFL-H*3621 (-GRM-07?YBG?)	29,000 [8.5]	21,300 [6.2]	7,700 [2.3]	11.20	13.00	71	975 [460]
	RCFL-H*3621 (-GTM-06?MAE?)	30,000 [8.8]	21,500 [6.3]	8,500 [2.5]	12.05	14.00	71	900 [425]
	RCFL-H*3621 (-GTM-07?RBG?)	31,000 [9.1]	23,400 [6.9]	7,600 [2.2]	12.00	14.00	71	1,125 [531]
	RCFL-H*3621 (-GTM-09?ZAJ?)	30,600 [9.0]	22,450 [6.6]	8,150 [2.4]	12.25	14.50	71	975 [460]
	ROCA-070E03 (RCFL-H*3621)	29,400 [8.6]	21,600 [6.3]	7,800 [2.3]	11.50	14.00	71	1,000 [472]
	ROCA-070E04 (RCFL-H*3621)	29,400 [8.6]	21,600 [6.3]	7,800 [2.3]	11.50	14.00	71	1,000 [472]
	ROLA-070E03 (RCFL-H*3621)	29,400 [8.6]	21,600 [6.3]	7,800 [2.3]	11.50	14.00	71	975 [460]
	ROLA-070E04 (RCFL-H*3621)	29,400 [8.6]	21,600 [6.3]	7,800 [2.3]	11.50	14.00	71	1,025 [484]
	ROLA-115E05 (RCFL-H*3621)	29,000 [8.5]	20,800 [6.1]	8,200 [2.4]	11.50	14.00	71	900 [425]
	-BHP-21 (RCHL-36A1)	29,200 [8.6]	20,600 [6.0]	8,600 [2.5]	11.95	14.00	71	1,000 [472]
	RCQD-3621 (-GFE-06?MCK?)	30,600 [9.0]	22,800 [6.7]	7,800 [2.3]	11.95	14.00	71	1,000 [472]
	RCQD-3621 (-GFE-07?MCK?)	30,600 [9.0]	22,800 [6.7]	7,800 [2.3]	11.90	14.00	71	1,025 [484]
	RCQD-3621 (-GFE-09?ZCM?)	30,800 [9.0]	22,950 [6.7]	7,850 [2.3]	12.40	14.50	71	975 [460]
	RCQD-3621 (-GFE-10?ZCM?)	30,800 [9.0]	23,000 [6.7]	7,800 [2.3]	12.20	14.00	71	1,025 [484]
	RCQD-3621 (-GGE-06?MCK?)	30,400 [8.9]	22,250 [6.5]	8,150 [2.4]	12.25	14.50	71	925 [437]
	RCQD-3621 (-GJF-06?MCK?)	30,600 [9.0]	22,800 [6.7]	7,800 [2.3]	12.15	14.00	71	1,025 [484]
	RCQD-3621 (-GJF-07?MCK?)	30,600 [9.0]	22,800 [6.7]	7,800 [2.3]	12.05	14.00	71	1,025 [484]
	RCQD-3621 (-GJF-09?ZCM?)	30,800 [9.0]	22,950 [6.7]	7,850 [2.3]	12.30	14.50	71	1,025 [484]
	RCQD-3621 (-GJF-10?ZCM?)	31,000 [9.1]	23,350 [6.8]	7,650 [2.2]	12.30	14.50	71	1,050 [495]
	RCQD-3621 (-GPE-05?BMK?)	30,200 [8.8]	22,000 [6.4]	8,200 [2.4]	12.25	14.50	71	900 [425]
	RCQD-3621 (-GPE-07?AMK?)	30,800 [9.0]	22,950 [6.7]	7,850 [2.3]	12.25	14.50	71	1,000 [472]
	RCQD-3621 (-GPE-07?BRQ?)	31,200 [9.1]	23,550 [6.9]	7,650 [2.2]	12.50	14.50	71	1,050 [495]
	RCQD-3621 (-GPE-10?BRM?)	31,200 [9.1]	23,600 [6.9]	7,600 [2.2]	12.60	14.50	71	1,075 [507]
	RCQD-3621 (RGPT-05?BMK?)	30,200 [8.8]	22,000 [6.4]	8,200 [2.4]	12.00	14.50	71	900 [425]
	RCQD-3621 (RGPT-07?AME?)	30,400 [8.9]	22,250 [6.5]	8,150 [2.4]	12.00	14.50	71	925 [437]
031JEZ	RCQD-3621 (RGPT-07?BRQ?)	31,200 [9.1]	23,500 [6.9]	7,700 [2.3]	12.00	14.50	71	1,050 [495]
	RCQD-3621 (RGPT-10?BRM?)	31,200 [9.1]	23,500 [6.9]	7,700 [2.3]	12.00	14.50	71	1,050 [495]
	ROCA-070E03 (RCQD-3621)	30,800 [9.0]	22,950 [6.7]	7,850 [2.3]	12.00	14.50	71	1,000 [472]
	ROCA-070E04 (RCQD-3621)	30,800 [9.0]	22,950 [6.7]	7,850 [2.3]	12.00	14.50	71	1,000 [472]
	ROLA-070E03 (RCQD-3621)	30,800 [9.0]	22,950 [6.7]	7,850 [2.3]	12.00	14.50	71	975 [460]
	ROLA-070E04 (RCQD-3621)	30,800 [9.0]	22,950 [6.7]	7,850 [2.3]	12.00	14.50	71	975 [460]
	ROLA-115E05 (RCQD-3621)	30,400 [8.9]	22,150 [6.5]	8,250 [2.4]	12.00	14.50	71	900 [425]
	RCQD-3621A* (-GFD-06?MCK?)	30,400 [8.9]	22,650 [6.6]	7,750 [2.3]	11.70	13.50	71	1,000 [472]
	RCQD-3621A* (-GFD-07?MCK?)	30,600 [9.0]	22,800 [6.7]	7,800 [2.3]	11.90	14.00	71	1,000 [472]
	RCQD-3621A* (-GJD-06?MCK?)	30,600 [9.0]	22,800 [6.7]	7,800 [2.3]	12.00	14.00	71	1,000 [472]
	RCQD-3621A* (-GJD-07?MCK?)	30,600 [9.0]	22,800 [6.7]	7,800 [2.3]	11.95	14.00	71	1,025 [484]
	RCQD-3621A* (-GPR-05?BMK?)	30,600 [9.0]	22,800 [6.7]	7,800 [2.3]	11.90	14.00	71	1,000 [472]
	RCQD-3621A* (-GPR-07?AMK?)	30,800 [9.0]	23,000 [6.7]	7,800 [2.3]	12.20	14.00	71	1,000 [472]
	RCQD-3621A* (-GPR-07?BRQ?)	31,000 [9.1]	23,150 [6.8]	7,850 [2.3]	12.55	14.00	71	1,000 [472]
	RCQD-3621A* (-GRM-04?MAE?)	30,400 [8.9]	22,650 [6.6]	7,750 [2.3]	11.70	13.50	71	1,025 [484]
	RCQD-3621A* (-GRM-06?MAE?)	30,600 [9.0]	22,800 [6.7]	7,800 [2.3]	11.90	14.00	71	1,000 [472]
	RCQD-3621A* (-GRM-07?MAE?)	30,200 [8.8]	22,500 [6.6]	7,700 [2.3]	11.45	13.50	71	1,025 [484]
	RCQD-3621A* (-GRM-07?YBG?)	30,400 [8.9]	22,650 [6.6]	7,750 [2.3]	11.80	13.50	71	975 [460]
	RCQD-3624 (RGPT-07?BRQ?)	31,200 [9.1]	23,500 [6.9]	7,700 [2.3]	12.00	14.50	71	1,050 [495]
	RCQD-3624 (RGPT-10?BRM?)	31,400 [9.2]	23,800 [7.0]	7,600 [2.2]	12.00	14.50	71	1,075 [507]
	RCQD-3624 (RGPT-12?ARM?)	31,000 [9.1]	23,100 [6.8]	7,900 [2.3]	12.00	14.50	71	975 [460]
	ROCA-070E03 (RCQD-3624)	30,800 [9.0]	22,950 [6.7]	7,850 [2.3]	12.00	14.50	71	1,000 [472]
	ROCA-070E04 (RCQD-3624)	30,800 [9.0]	22,950 [6.7]	7,850 [2.3]	12.00	14.50	71	1,000 [472]
	ROLA-070E03 (RCQD-3624)	30,800 [9.0]	22,950 [6.7]	7,850 [2.3]	12.00	14.50	71	975 [460]
	ROLA-070E04 (RCQD-3624)	30,800 [9.0]	22,950 [6.7]	7,850 [2.3]	12.00	14.50	71	1,025 [484]
	ROLA-115E05 (RCQD-3624)	30,400 [8.9]	22,150 [6.5]	8,250 [2.4]	12.00	14.50	71	900 [425]
	RCQD-3624A* (-GRM-07?YBG?)	30,600 [9.0]	22,850 [6.7]	7,750 [2.3]	11.85	14.00	71	975 [460]

① Highest sales volume tested combination required by D.O.E. test procedures.

[ ] Designates Metric Conversions

Performance Data @ AHRI Standard Conditions—Cooling: UANL- JEZ (continued)

Model Numbers		80°F [26.5°C] DB/67°F [19.5°C] WB Indoor Air 95°F [35°C] DB Outdoor Air					Sound Rating dB	Indoor CFM [L/s]
Outdoor Unit UANL-	Indoor Coil and/or Air Handler	Total Capacity BTU/H [kW]	Net Sensible BTU/H [kW]	Net Latent BTU/H [kW]	EER	SEER		
Rev. 7/1/2010 031JEZ	-HKL-HM3617 (RCSL-H*3617)	29,400 [8.6]	21,600 [6.3]	7,800 [2.3]	11.90	14.00	71	1,025 [484]
	-HLL-HM3617 (RCSL-H*3617)	29,400 [8.6]	21,550 [6.3]	7,850 [2.3]	12.05	14.00	71	1,000 [472]
	-HSL-HM3017 (RCSL-H*3617)	28,800 [8.4]	20,900 [6.1]	7,900 [2.3]	11.20	13.00	71	950 [448]
037JEZ	RCFL-H*3617 ①	37,600 [11.0]	25,750 [7.5]	11,850 [3.5]	11.20	13.00	74	1,050 [495]
	RCFL-A*3617	37,600 [11.0]	25,750 [7.5]	11,850 [3.5]	11.20	13.00	74	1,050 [495]
	RCFL-A*3617 (-GFE-07?MCK?)	37,800 [11.1]	25,900 [7.6]	11,900 [3.5]	11.55	13.50	74	1,025 [484]
	RCFL-A*3617 (-GGD-07?MCK?)	37,800 [11.1]	25,900 [7.6]	11,900 [3.5]	11.60	13.50	74	1,025 [484]
	RCFL-A*3617 (-GGE-06?MCK?)	38,000 [11.1]	26,050 [7.6]	11,950 [3.5]	11.75	13.50	74	1,025 [484]
	RCFL-A*3617 (-GGE-07?MCK?)	38,000 [11.1]	26,050 [7.6]	11,950 [3.5]	11.70	13.50	74	1,025 [484]
	RCFL-A*3617 (-GJF-06?MCK?)	38,500 [11.3]	28,000 [8.2]	10,500 [3.1]	11.55	13.50	74	1,200 [566]
	RCFL-A*3617 (-GLE-07?AMK?)	38,500 [11.3]	27,950 [8.2]	10,550 [3.1]	11.75	13.50	74	1,200 [566]
	RCFL-A*3617 (-GLR-07?AMK?)	38,000 [11.1]	26,050 [7.6]	11,950 [3.5]	11.85	13.50	74	1,025 [484]
	RCFL-A*3617 (RGLT-07?AME?)	38,500 [11.3]	27,300 [8.0]	11,200 [3.3]	11.00	13.00	74	1,200 [566]
	RCFL-A*3617 (-GPE-05?BMK?)	38,500 [11.3]	27,350 [8.0]	11,150 [3.3]	11.25	13.00	74	1,200 [566]
	RCFL-A*3617 (-GPE-07?AMK?)	38,500 [11.3]	27,450 [8.0]	11,050 [3.2]	11.35	13.00	74	1,225 [578]
	RCFL-A*3617 (-GPR-07?AMK?)	38,500 [11.3]	27,350 [8.0]	11,150 [3.3]	11.40	13.00	74	1,200 [566]
	RCFL-A*3617 (RGPT-07?AME?)	38,500 [11.3]	27,200 [8.0]	11,300 [3.3]	11.00	13.00	74	1,175 [554]
	RCFL-A*3617 (-GRM-04?MAE?)	37,800 [11.1]	25,900 [7.6]	11,900 [3.5]	11.45	13.00	74	1,025 [484]
	RCFL-A*3617 (-GRM-07?MAE?)	37,600 [11.0]	25,750 [7.5]	11,850 [3.5]	11.25	13.00	74	1,025 [484]
	RCFL-A*3617 (-GRM-09?ZAJ?)	38,500 [11.3]	27,450 [8.0]	11,050 [3.2]	11.40	13.00	74	1,225 [578]
	RCFL-A*3617 (-GRM-10?ZAJ?)	38,500 [11.3]	27,100 [7.9]	11,400 [3.3]	11.45	13.00	74	1,150 [543]
	ROCA-070E03 (RCFL-A*3617)	38,500 [11.3]	27,350 [8.0]	11,150 [3.3]	11.00	13.00	74	1,200 [566]
	ROCA-070E04 (RCFL-A*3617)	38,500 [11.3]	27,350 [8.0]	11,150 [3.3]	11.00	13.00	74	1,200 [566]
	ROLA-070E03 (RCFL-A*3617)	38,500 [11.3]	27,150 [8.0]	11,350 [3.3]	11.50	13.50	74	1,175 [554]
	ROLA-070E04 (RCFL-A*3617)	38,500 [11.3]	27,150 [8.0]	11,350 [3.3]	11.50	13.50	74	1,175 [554]
	RCFL-A*3621	37,600 [11.0]	25,750 [7.5]	11,850 [3.5]	11.20	13.00	74	1,050 [495]
	RCFL-A*3621 (-GFD-09?ZCM?)	38,500 [11.3]	27,050 [7.9]	11,450 [3.4]	11.70	13.50	74	1,150 [543]
	RCFL-A*3621 (-GFD-10?ZCM?)	38,500 [11.3]	27,150 [8.0]	11,350 [3.3]	11.55	13.50	74	1,175 [554]
	RCFL-A*3621 (-GFE-07?MCK?)	37,800 [11.1]	25,900 [7.6]	11,900 [3.5]	11.60	13.50	74	1,025 [484]
	RCFL-A*3621 (-GFE-09?ZCM?)	38,500 [11.3]	27,300 [8.0]	11,200 [3.3]	11.55	13.00	74	1,200 [566]
	RCFL-A*3621 (-GFE-10?ZCM?)	38,500 [11.3]	27,450 [8.0]	11,050 [3.2]	11.45	13.00	74	1,225 [578]
	RCFL-A*3621 (-GGD-07?MCK?)	37,800 [11.1]	25,850 [7.6]	11,950 [3.5]	11.65	13.50	74	1,025 [484]
	RCFL-A*3621 (-GGD-09?ZCM?)	38,500 [11.3]	27,150 [8.0]	11,350 [3.3]	11.70	13.50	74	1,175 [554]
	RCFL-A*3621 (-GGD-10?ZCM?)	38,500 [11.3]	27,150 [8.0]	11,350 [3.3]	11.75	13.50	74	1,175 [554]
	RCFL-A*3621 (-GGE-06?MCK?)	38,500 [11.3]	28,000 [8.2]	10,500 [3.1]	11.60	13.50	74	1,200 [566]
	RCFL-A*3621 (-GGE-07?MCK?)	38,000 [11.1]	26,050 [7.6]	11,950 [3.5]	11.75	13.50	74	1,025 [484]
	RCFL-A*3621 (-GGE-09?ZCM?)	39,000 [11.4]	27,900 [8.2]	11,100 [3.3]	11.65	13.50	74	1,225 [578]
	RCFL-A*3621 (-GGE-10?ZCM?)	38,500 [11.3]	27,300 [8.0]	11,200 [3.3]	11.55	13.50	74	1,200 [566]
	RCFL-A*3621 (-GJF-06?MCK?)	38,500 [11.3]	28,000 [8.2]	10,500 [3.1]	11.60	13.50	74	1,200 [566]
	RCFL-A*3621 (-GLE-07?AMK?)	38,500 [11.3]	27,950 [8.2]	10,550 [3.1]	11.80	13.50	74	1,200 [566]
	RCFL-A*3621 (-GLE-10?BRM?)	39,000 [11.4]	28,350 [8.3]	10,650 [3.1]	12.25	14.50	74	1,200 [566]
	RCFL-A*3621 (-GLR-07?AMK?)	38,000 [11.1]	26,000 [7.6]	12,000 [3.5]	11.85	13.50	74	1,025 [484]
	RCFL-A*3621 (-GLR-10?BRM?)	39,000 [11.4]	27,700 [8.1]	11,300 [3.3]	11.90	13.50	74	1,200 [566]
	RCFL-A*3621 (RGLT-07?AME?)	38,500 [11.3]	27,300 [8.0]	11,200 [3.3]	11.50	13.00	74	1,200 [566]
	RCFL-A*3621 (RGLT-07?BRQ?)	39,000 [11.4]	27,750 [8.1]	11,250 [3.3]	11.50	13.50	74	1,200 [566]
	RCFL-A*3621 (RGLT-10?BRM?)	38,500 [11.3]	27,100 [7.9]	11,400 [3.3]	11.50	13.50	74	1,175 [554]
	RCFL-A*3621 (RGPE-05?BMK?)	38,500 [11.3]	27,350 [8.0]	11,150 [3.3]	11.30	13.00	74	1,200 [566]
	RCFL-A*3621 (-GPE-07?AMK?)	38,500 [11.3]	27,450 [8.0]	11,050 [3.2]	11.40	13.00	74	1,225 [578]
	RCFL-A*3621 (-GPE-07?BRQ?)	38,000 [11.1]	25,950 [7.6]	12,050 [3.5]	12.10	14.00	74	1,025 [484]
	RCFL-A*3621 (-GPE-10?BRM?)	38,000 [11.1]	26,000 [7.6]	12,000 [3.5]	12.05	14.00	74	1,075 [507]
	RCFL-A*3621 (-GPR-07?BRQ?)	39,000 [11.4]	27,700 [8.1]	11,300 [3.3]	11.90	13.50	74	1,200 [566]
	RCFL-A*3621 (RGPT-05?BMK?)	37,800 [11.1]	25,900 [7.6]	11,900 [3.5]	11.50	13.50	74	1,075 [507]
	RCFL-A*3621 (RGPT-07?AME?)	38,500 [11.3]	27,350 [8.0]	11,150 [3.3]	11.00	13.00	74	1,200 [566]
	RCFL-A*3621 (RGPT-07?BRQ?)	38,500 [11.3]	27,100 [7.9]	11,400 [3.3]	11.50	13.50	74	1,175 [554]
	RCFL-A*3621 (RGPT-10?BRM?)	39,000 [11.4]	27,600 [8.1]	11,400 [3.3]	11.50	14.00	74	1,175 [554]

① Highest sales volume tested combination required by D.O.E. test procedures.

[ ] Designates Metric Conversions

Performance Data @ AHRI Standard Conditions—Cooling: UANL- JEZ (continued)

Model Numbers		80°F [26.5°C] DB/67°F [19.5°C] WB Indoor Air 95°F [35°C] DB Outdoor Air					Sound Rating dB	Indoor CFM [L/s]
Outdoor Unit UANL-	Indoor Coil and/or Air Handler	Total Capacity BTU/H [kW]	Net Sensible BTU/H [kW]	Net Latent BTU/H [kW]	EER	SEER		
Rev. 7/1/2010	RCFL-A*3621 (-GRM-04?MAE?)	37,800 [11.1]	25,900 [7.6]	11,900 [3.5]	11.50	13.00	74	1,025 [484]
	RCFL-A*3621 (-GRM-07?MAE?)	37,600 [11.0]	25,750 [7.5]	11,850 [3.5]	11.30	13.00	74	1,025 [484]
	RCFL-A*3621 (-GRM-09?ZAJ?)	38,500 [11.3]	27,450 [8.0]	11,050 [3.2]	11.45	13.00	74	1,225 [578]
	RCFL-A*3621 (-GRM-10?ZAJ?)	38,500 [11.3]	27,050 [7.9]	11,450 [3.4]	11.50	13.00	74	1,150 [543]
	RCFL-A*3621 (-GRM-12?RAJ?)	39,000 [11.4]	27,900 [8.2]	11,100 [3.3]	11.65	13.50	74	1,225 [578]
	RCFL-A*3621 (-GTM-07?RBG?)	38,500 [11.3]	27,550 [8.1]	10,950 [3.2]	12.15	14.00	74	1,125 [531]
	RCFL-A*3621 (-GTM-09?ZAJ?)	38,500 [11.3]	27,400 [8.0]	11,100 [3.3]	12.15	14.00	74	1,100 [519]
	ROCA-070E03 (RCFL-A*3621)	38,500 [11.3]	27,300 [8.0]	11,200 [3.3]	11.00	13.00	74	1,200 [566]
	ROCA-070E04 (RCFL-A*3621)	38,500 [11.3]	27,300 [8.0]	11,200 [3.3]	11.00	13.00	74	1,200 [566]
	ROLA-070E03 (RCFL-A*3621)	38,500 [11.3]	27,150 [8.0]	11,350 [3.3]	11.50	13.50	74	1,175 [554]
	ROLA-070E04 (RCFL-A*3621)	38,500 [11.3]	27,150 [8.0]	11,350 [3.3]	11.50	13.50	74	1,175 [554]
	RCFL-H*3617 (-GFE-07?MCK?)	37,800 [11.1]	25,900 [7.6]	11,900 [3.5]	11.55	13.50	74	1,025 [484]
	RCFL-H*3617 (-GGD-07?MCK?)	37,800 [11.1]	25,900 [7.6]	11,900 [3.5]	11.60	13.50	74	1,025 [484]
	RCFL-H*3617 (-GGE-06?MCK?)	38,500 [11.3]	28,000 [8.2]	10,500 [3.1]	11.55	13.50	74	1,200 [566]
	RCFL-H*3617 (-GGE-07?MCK?)	38,000 [11.1]	26,050 [7.6]	11,950 [3.5]	11.70	13.50	74	1,025 [484]
	RCFL-H*3617 (-GJD-07?MCK?)	37,800 [11.1]	25,900 [7.6]	11,900 [3.5]	11.60	13.50	74	1,025 [484]
	RCFL-H*3617 (-GJF-06?MCK?)	38,500 [11.3]	28,000 [8.2]	10,500 [3.1]	11.55	13.50	74	1,200 [566]
	RCFL-H*3617 (-GJF-07?MCK?)	38,500 [11.3]	28,050 [8.2]	10,450 [3.1]	11.50	13.50	74	1,200 [566]
	RCFL-H*3617 (-GLE-07?AMK?)	38,500 [11.3]	27,950 [8.2]	10,550 [3.1]	11.75	13.50	74	1,200 [566]
	RCFL-H*3617 (-GLR-07?AMK?)	38,000 [11.1]	26,050 [7.6]	11,950 [3.5]	11.85	13.50	74	1,025 [484]
	RCFL-H*3617 (RGLT-07?AME?)	38,500 [11.3]	27,300 [8.0]	11,200 [3.3]	11.50	13.00	74	1,200 [566]
	RCFL-H*3617 (-GPE-05?BMK?)	38,500 [11.3]	28,000 [8.2]	10,500 [3.1]	11.50	13.50	74	1,200 [566]
	RCFL-H*3617 (-GPE-07?AMK?)	38,500 [11.3]	27,450 [8.0]	11,050 [3.2]	11.35	13.00	74	1,225 [578]
	RCFL-H*3617 (-GPR-07?AMK?)	38,500 [11.3]	27,350 [8.0]	11,150 [3.3]	11.40	13.00	74	1,200 [566]
	RCFL-H*3617 (RGPT-07?AME?)	38,500 [11.3]	27,200 [8.0]	11,300 [3.3]	11.00	13.00	74	1,175 [554]
	RCFL-H*3617 (-GRM-04?MAE?)	37,800 [11.1]	25,900 [7.6]	11,900 [3.5]	11.45	13.00	74	1,025 [484]
	RCFL-H*3617 (-GRM-07?MAE?)	37,600 [11.0]	25,750 [7.5]	11,850 [3.5]	11.25	13.00	74	1,025 [484]
037JEZ	RCFL-H*3617 (-GRM-09?ZAJ?)	38,500 [11.3]	27,450 [8.0]	11,050 [3.2]	11.40	13.00	74	1,225 [578]
	RCFL-H*3617 (-GRM-10?ZAJ?)	38,500 [11.3]	27,100 [7.9]	11,400 [3.3]	11.45	13.00	74	1,150 [543]
	ROCA-070E03 (RCFL-H*3617)	38,500 [11.3]	27,350 [8.0]	11,150 [3.3]	11.00	13.00	74	1,200 [566]
	ROCA-070E04 (RCFL-H*3617)	38,500 [11.3]	27,350 [8.0]	11,150 [3.3]	11.00	13.00	74	1,200 [566]
	ROLA-070E03 (RCFL-H*3617)	38,500 [11.3]	27,150 [8.0]	11,350 [3.3]	11.50	13.50	74	1,175 [554]
	ROLA-070E04 (RCFL-H*3617)	38,500 [11.3]	27,150 [8.0]	11,350 [3.3]	11.50	13.50	74	1,175 [554]
	RCFL-H*3621	37,600 [11.0]	25,750 [7.5]	11,850 [3.5]	11.20	13.00	74	1,050 [495]
	RCFL-H*3621 (-GFD-09?ZCM?)	38,500 [11.3]	27,050 [7.9]	11,450 [3.4]	11.70	13.50	74	1,150 [543]
	RCFL-H*3621 (-GFD-10?ZCM?)	38,500 [11.3]	27,150 [8.0]	11,350 [3.3]	11.55	13.50	74	1,175 [554]
	RCFL-H*3621 (-GFE-07?MCK?)	37,800 [11.1]	25,900 [7.6]	11,900 [3.5]	11.60	13.50	74	1,025 [484]
	RCFL-H*3621 (-GFE-09?ZCM?)	38,500 [11.3]	27,300 [8.0]	11,200 [3.3]	11.55	13.00	74	1,200 [566]
	RCFL-H*3621 (-GFE-10?ZCM?)	38,500 [11.3]	27,450 [8.0]	11,050 [3.2]	11.45	13.00	74	1,225 [578]
	RCFL-H*3621 (-GGD-07?MCK?)	37,800 [11.1]	25,850 [7.6]	11,950 [3.5]	11.65	13.50	74	1,025 [484]
	RCFL-H*3621 (-GGD-09?ZCM?)	38,500 [11.3]	27,150 [8.0]	11,350 [3.3]	11.70	13.50	74	1,175 [554]
	RCFL-H*3621 (-GGD-10?ZCM?)	38,500 [11.3]	27,150 [8.0]	11,350 [3.3]	11.75	13.50	74	1,175 [554]
	RCFL-H*3621 (-GGE-06?MCK?)	38,500 [11.3]	28,000 [8.2]	10,500 [3.1]	11.60	13.50	74	1,200 [566]
	RCFL-H*3621 (-GGE-07?MCK?)	38,000 [11.1]	26,050 [7.6]	11,950 [3.5]	11.75	13.50	74	1,025 [484]
	RCFL-H*3621 (-GGE-09?ZCM?)	39,000 [11.4]	27,900 [8.2]	11,100 [3.3]	11.65	13.50	74	1,225 [578]
	RCFL-H*3621 (-GGE-10?ZCM?)	38,500 [11.3]	27,300 [8.0]	11,200 [3.3]	11.55	13.50	74	1,200 [566]
	RCFL-H*3621 (-GJD-07?MCK?)	37,800 [11.1]	25,850 [7.6]	11,950 [3.5]	11.65	13.50	74	1,025 [484]
	RCFL-H*3621 (-GJD-09?ZCM?)	38,500 [11.3]	27,150 [8.0]	11,350 [3.3]	11.70	13.50	74	1,175 [554]
	RCFL-H*3621 (-GJD-10?ZCM?)	38,500 [11.3]	27,150 [8.0]	11,350 [3.3]	11.75	13.50	74	1,175 [554]
	RCFL-H*3621 (-GJF-06?MCK?)	38,500 [11.3]	28,000 [8.2]	10,500 [3.1]	11.60	13.50	74	1,200 [566]
	RCFL-H*3621 (-GJF-07?MCK?)	38,500 [11.3]	28,000 [8.2]	10,500 [3.1]	11.50	13.50	74	1,200 [566]
	RCFL-H*3621 (-GJF-09?ZCM?)	39,000 [11.4]	27,900 [8.2]	11,100 [3.3]	11.65	13.50	74	1,225 [578]
	RCFL-H*3621 (-GJF-10?ZCM?)	38,500 [11.3]	27,950 [8.2]	10,550 [3.1]	11.85	13.50	74	1,200 [566]
	RCFL-H*3621 (-GLE-07?AMK?)	38,500 [11.3]	27,950 [8.2]	10,550 [3.1]	11.80	13.50	74	1,200 [566]
	RCFL-H*3621 (-GLE-10?BRM?)	39,000 [11.4]	28,350 [8.3]	10,650 [3.1]	12.25	14.50	74	1,200 [566]

① Highest sales volume tested combination required by D.O.E. test procedures.

[ ] Designates Metric Conversions

Performance Data @ AHRI Standard Conditions—Cooling: UANL- JEZ (continued)

Model Numbers		80°F [26.5°C] DB/67°F [19.5°C] WB Indoor Air 95°F [35°C] DB Outdoor Air					Sound Rating dB	Indoor CFM [L/s]
Outdoor Unit UANL-	Indoor Coil and/or Air Handler	Total Capacity BTU/H [kW]	Net Sensible BTU/H [kW]	Net Latent BTU/H [kW]	EER	SEER		
Rev. 7/1/2010	RCFL-H*3621 (-GLR-07?AMK?)	38,000 [11.1]	26,000 [7.6]	12,000 [3.5]	11.85	13.50	74	1,025 [484]
	RCFL-H*3621 (-GLR-10?BRM?)	39,000 [11.4]	27,700 [8.1]	11,300 [3.3]	11.90	13.50	74	1,200 [566]
	RCFL-H*3621 (RGLT-07?AME?)	38,500 [11.3]	27,300 [8.0]	11,200 [3.3]	11.55	13.00	74	1,200 [566]
	RCFL-H*3621 (RGLT-07?BRQ?)	39,000 [11.4]	27,750 [8.1]	11,250 [3.3]	11.50	13.50	74	1,200 [566]
	RCFL-H*3621 (RGLT-10?BRM?)	38,500 [11.3]	27,100 [7.9]	11,400 [3.3]	11.50	13.50	74	1,175 [554]
	RCFL-H*3621 (-GPE-05?BMK?)	38,500 [11.3]	28,000 [8.2]	10,500 [3.1]	11.60	13.50	74	1,200 [566]
	RCFL-H*3621 (-GPE-07?AMK?)	38,500 [11.3]	27,450 [8.0]	11,050 [3.2]	11.40	13.00	74	1,225 [578]
	RCFL-H*3621 (-GPE-07?BRQ?)	38,000 [11.1]	25,950 [7.6]	12,050 [3.5]	12.10	14.00	74	1,025 [484]
	RCFL-H*3621 (-GPE-10?BRM?)	38,000 [11.1]	26,000 [7.6]	12,000 [3.5]	12.05	14.00	74	1,075 [507]
	RCFL-H*3621 (-GPR-07?AMK?)	38,500 [11.3]	27,300 [8.0]	11,200 [3.3]	11.45	13.00	74	1,200 [566]
	RCFL-H*3621 (-GPR-07?BRQ?)	39,000 [11.4]	27,700 [8.1]	11,300 [3.3]	11.90	13.50	74	1,200 [566]
	RCFL-H*3621 (RGPT-05?BMK?)	37,800 [11.1]	25,900 [7.6]	11,900 [3.5]	11.50	13.50	74	1,075 [507]
	RCFL-H*3621 (RGPT-07?AME?)	38,500 [11.3]	27,350 [8.0]	11,150 [3.3]	11.40	13.00	74	1,200 [566]
	RCFL-H*3621 (RGPT-07?BRQ?)	38,500 [11.3]	27,100 [7.9]	11,400 [3.3]	11.50	13.50	74	1,175 [554]
	RCFL-H*3621 (RGPT-10?BRM?)	39,000 [11.4]	27,600 [8.1]	11,400 [3.3]	11.50	14.00	74	1,175 [554]
	RCFL-H*3621 (-GRM-04?MAE?)	37,800 [11.1]	25,900 [7.6]	11,900 [3.5]	11.50	13.00	74	1,025 [484]
	RCFL-H*3621 (-GRM-07?MAE?)	37,600 [11.0]	25,750 [7.5]	11,850 [3.5]	11.30	13.00	74	1,025 [484]
	RCFL-H*3621 (-GRM-09?ZAJ?)	38,500 [11.3]	27,450 [8.0]	11,050 [3.2]	11.45	13.00	74	1,225 [578]
	RCFL-H*3621 (-GRM-10?ZAJ?)	38,500 [11.3]	27,050 [7.9]	11,450 [3.4]	11.50	13.00	74	1,150 [543]
	RCFL-H*3621 (-GRM-12?RAJ?)	39,000 [11.4]	27,900 [8.2]	11,100 [3.3]	11.65	13.50	74	1,225 [578]
	RCFL-H*3621 (-GTM-07?RBG?)	38,500 [11.3]	27,550 [8.1]	10,950 [3.2]	12.15	14.00	74	1,125 [531]
	RCFL-H*3621 (-GTM-09?ZAJ?)	38,500 [11.3]	27,400 [8.0]	11,100 [3.3]	12.15	14.00	74	1,100 [519]
	ROCA-070E03 (RCFL-H*3621)	38,500 [11.3]	27,300 [8.0]	11,200 [3.3]	11.00	13.00	74	1,200 [566]
	ROCA-070E04 (RCFL-H*3621)	38,500 [11.3]	27,300 [8.0]	11,200 [3.3]	11.00	13.00	74	1,200 [566]
	ROLA-070E03 (RCFL-H*3621)	38,500 [11.3]	27,150 [8.0]	11,350 [3.3]	11.50	13.50	74	1,175 [554]
	ROLA-070E04 (RCFL-H*3621)	38,500 [11.3]	27,150 [8.0]	11,350 [3.3]	11.50	13.50	74	1,175 [554]
	-BHP-21 (RCHL-36A1)	38,000 [11.1]	25,800 [7.6]	12,200 [3.6]	11.65	14.00	74	1,200 [566]
037JEZ	RCQD-3621 (-GFE-06?MCK?)	39,500 [11.6]	28,200 [8.3]	11,300 [3.3]	11.35	13.50	74	1,200 [566]
	RCQD-3621 (-GFE-07?MCK?)	39,500 [11.6]	28,200 [8.3]	11,300 [3.3]	11.20	13.00	74	1,225 [578]
	RCQD-3621 (-GFE-09?ZCM?)	40,000 [11.7]	28,600 [8.4]	11,400 [3.3]	11.85	14.00	74	1,200 [566]
	RCQD-3621 (-GFE-10?ZCM?)	40,000 [11.7]	28,600 [8.4]	11,400 [3.3]	11.80	14.00	74	1,225 [578]
	RCQD-3621 (-GJF-06?MCK?)	39,500 [11.6]	28,150 [8.2]	11,350 [3.3]	11.65	13.50	74	1,200 [566]
	RCQD-3621 (-GJF-07?MCK?)	39,500 [11.6]	28,150 [8.2]	11,350 [3.3]	11.50	13.50	74	1,200 [566]
	RCQD-3621 (-GJF-09?ZCM?)	40,000 [11.7]	28,550 [8.4]	11,450 [3.4]	11.95	14.00	74	1,225 [578]
	RCQD-3621 (-GJF-10?ZCM?)	40,000 [11.7]	28,550 [8.4]	11,450 [3.4]	11.90	14.00	74	1,200 [566]
	RCQD-3621 (-GPE-05?BMK?)	39,500 [11.6]	28,150 [8.2]	11,350 [3.3]	11.60	13.50	74	1,200 [566]
	RCQD-3621 (-GPE-07?AMK?)	40,000 [11.7]	28,600 [8.4]	11,400 [3.3]	11.70	13.50	74	1,225 [578]
	RCQD-3621 (-GPE-07?BRQ?)	40,000 [11.7]	28,500 [8.4]	11,500 [3.4]	12.10	14.50	74	1,225 [578]
	RCQD-3621 (-GPE-10?BRM?)	39,500 [11.6]	27,350 [8.0]	12,150 [3.6]	12.25	14.50	74	1,075 [507]
	RCQD-3621 (RGPT-05?BMK?)	40,000 [11.7]	28,950 [8.5]	11,050 [3.2]	11.00	13.50	74	1,250 [590]
	RCQD-3621 (RGPT-07?AME?)	40,000 [11.7]	28,900 [8.5]	11,100 [3.3]	11.50	13.50	74	1,250 [590]
	RCQD-3621 (RGPT-07?BRQ?)	40,500 [11.9]	29,250 [8.6]	11,250 [3.3]	12.00	14.50	74	1,250 [590]
	RCQD-3621 (RGPT-10?BRM?)	40,500 [11.9]	29,250 [8.6]	11,250 [3.3]	12.00	14.50	74	1,250 [590]
	ROCA-070E03 (RCQD-3621)	40,000 [11.7]	28,600 [8.4]	11,400 [3.3]	11.50	14.00	74	1,200 [566]
	ROCA-070E04 (RCQD-3621)	40,000 [11.7]	28,600 [8.4]	11,400 [3.3]	11.50	14.00	74	1,200 [566]
	ROLA-070E03 (RCQD-3621)	40,000 [11.7]	28,550 [8.4]	11,450 [3.4]	11.50	14.00	74	1,175 [554]
	ROLA-070E04 (RCQD-3621)	40,000 [11.7]	28,550 [8.4]	11,450 [3.4]	11.50	14.00	74	1,175 [554]
	ROLA-115E05 (RCQD-3621)	40,000 [11.7]	28,500 [8.4]	11,500 [3.4]	12.00	14.50	74	1,200 [566]
	RCQD-3621A*	38,500 [11.3]	27,450 [8.0]	11,050 [3.2]	11.05	13.00	74	1,200 [566]
	RCQD-3621A* (-GFD-09?ZCM?)	39,500 [11.6]	27,800 [8.1]	11,700 [3.4]	11.95	14.00	74	1,150 [543]
	RCQD-3621A* (-GFD-10?ZCM?)	40,000 [11.7]	28,550 [8.4]	11,450 [3.4]	11.90	14.00	74	1,175 [554]
	RCQD-3621A* (-GJD-06?MCK?)	39,500 [11.6]	28,200 [8.3]	11,300 [3.3]	11.40	13.50	74	1,225 [578]
	RCQD-3621A* (-GJD-09?ZCM?)	40,000 [11.7]	28,550 [8.4]	11,450 [3.4]	12.00	14.00	74	1,175 [554]
	RCQD-3621A* (-GJD-10?ZCM?)	40,000 [11.7]	28,550 [8.4]	11,450 [3.4]	12.05	14.00	74	1,175 [554]
	RCQD-3621A* (-GPR-05?BMK?)	39,500 [11.6]	28,200 [8.3]	11,300 [3.3]	11.35	13.50	74	1,200 [566]

① Highest sales volume tested combination required by D.O.E. test procedures.

[ ] Designates Metric Conversions

Performance Data @ AHRI Standard Conditions—Cooling: UANL- JEZ (continued)

Model Numbers		80°F [26.5°C] DB/67°F [19.5°C] WB Indoor Air 95°F [35°C] DB Outdoor Air					Sound Rating dB	Indoor CFM [L/s]
Outdoor Unit UANL-	Indoor Coil and/or Air Handler	Total Capacity BTU/H [kW]	Net Sensible BTU/H [kW]	Net Latent BTU/H [kW]	EER	SEER		
Rev. 7/1/2010	RCQD-3621A* (-GPR-07?AMK?)	40,000 [11.7]	28,600 [8.4]	11,400 [3.3]	11.75	13.50	74	1,200 [566]
	RCQD-3621A* (-GPR-07?BRQ?)	40,000 [11.7]	28,500 [8.4]	11,500 [3.4]	12.15	14.00	74	1,200 [566]
	RCQD-3621A* (-GPR-10?BRM?)	40,000 [11.7]	28,550 [8.4]	11,450 [3.4]	12.00	14.00	74	1,225 [578]
	RCQD-3621A* (-GRM-04?MAE?)	39,500 [11.6]	28,250 [8.3]	11,250 [3.3]	11.20	13.00	74	1,200 [566]
	RCQD-3621A* (-GRM-06?MAE?)	39,500 [11.6]	28,200 [8.3]	11,300 [3.3]	11.25	13.00	74	1,175 [554]
	RCQD-3621A* (-GRM-07?MAE?)	38,500 [11.3]	26,300 [7.7]	12,200 [3.6]	11.40	13.50	74	1,025 [484]
	RCQD-3621A* (-GRM-07?YBG?)	39,500 [11.6]	28,250 [8.3]	11,250 [3.3]	11.10	13.00	74	1,200 [566]
	RCQD-3621A* (-GRM-09?ZAJ?)	40,500 [11.9]	30,250 [8.9]	10,250 [3.0]	11.25	13.00	74	1,400 [661]
	RCQD-3621A* (-GRM-10?ZAJ?)	39,500 [11.6]	27,850 [8.2]	11,650 [3.4]	11.75	14.00	74	1,150 [543]
	RCQD-3621A* (-GRM-12?RAJ?)	40,000 [11.7]	28,550 [8.4]	11,450 [3.4]	11.90	14.00	74	1,225 [578]
	RCQD-3624 (RGPT-07?BRQ?)	40,500 [11.9]	29,400 [8.6]	11,100 [3.3]	12.00	14.50	74	1,275 [602]
	RCQD-3624 (RGPT-10?BRM?)	40,500 [11.9]	29,400 [8.6]	11,100 [3.3]	12.00	14.50	74	1,275 [602]
	RCQD-3624 (RGPT-12?ARM?)	40,500 [11.9]	28,950 [8.5]	11,550 [3.4]	12.00	14.50	74	1,225 [578]
	ROCA-070E03 (RCQD-3624)	40,000 [11.7]	28,550 [8.4]	11,450 [3.4]	11.50	14.00	74	1,200 [566]
	ROCA-070E04 (RCQD-3624)	40,000 [11.7]	28,550 [8.4]	11,450 [3.4]	11.50	14.00	74	1,200 [566]
	ROLA-070E03 (RCQD-3624)	40,000 [11.7]	28,500 [8.4]	11,500 [3.4]	12.00	14.50	74	1,175 [554]
	ROLA-070E04 (RCQD-3624)	40,000 [11.7]	28,500 [8.4]	11,500 [3.4]	12.00	14.50	74	1,175 [554]
	ROLA-115E05 (RCQD-3624)	40,000 [11.7]	28,500 [8.4]	11,500 [3.4]	12.00	14.50	74	1,200 [566]
	RCQD-3624A*	38,500 [11.3]	27,450 [8.0]	11,050 [3.2]	11.05	13.00	74	1,200 [566]
037JEZ	RCQD-3624A* (-GFD-09?ZCM?)	39,500 [11.6]	27,800 [8.1]	11,700 [3.4]	11.95	14.00	74	1,150 [543]
	RCQD-3624A* (-GFD-10?ZCM?)	40,000 [11.7]	28,550 [8.4]	11,450 [3.4]	11.90	14.00	74	1,175 [554]
	RCQD-3624A* (-GFD-12?RCM?)	40,000 [11.7]	28,550 [8.4]	11,450 [3.4]	11.95	14.00	74	1,225 [578]
	RCQD-3624A* (-GJD-07?MCK?)	39,500 [11.6]	28,200 [8.3]	11,300 [3.3]	11.30	13.00	74	1,225 [578]
	RCQD-3624A* (-GJD-09?ZCM?)	40,000 [11.7]	28,550 [8.4]	11,450 [3.4]	12.00	14.00	74	1,175 [554]
	RCQD-3624A* (-GJD-10?ZCM?)	40,000 [11.7]	28,550 [8.4]	11,450 [3.4]	12.05	14.00	74	1,175 [554]
	RCQD-3624A* (-GJD-12?RCM?)	40,000 [11.7]	28,550 [8.4]	11,450 [3.4]	12.10	14.00	74	1,225 [578]
	RCQD-3624A* (-GPR-05?BMK?)	39,500 [11.6]	28,200 [8.3]	11,300 [3.3]	11.35	13.50	74	1,200 [566]
	RCQD-3624A* (-GPR-07?AMK?)	40,000 [11.7]	28,600 [8.4]	11,400 [3.3]	11.75	13.50	74	1,200 [566]
	RCQD-3624A* (-GPR-07?BRQ?)	40,000 [11.7]	28,500 [8.4]	11,500 [3.4]	12.15	14.00	74	1,200 [566]
	RCQD-3624A* (-GPR-10?BRM?)	40,000 [11.7]	28,550 [8.4]	11,450 [3.4]	12.00	14.00	74	1,225 [578]
	RCQD-3624A* (-GPR-12?ARM?)	40,500 [11.9]	29,300 [8.6]	11,200 [3.3]	12.15	14.00	74	1,250 [590]
	RCQD-3624A* (-GRM-07?YBG?)	39,500 [11.6]	28,250 [8.3]	11,250 [3.3]	11.15	13.00	74	1,200 [566]
	RCQD-3624A* (-GRM-09?ZAJ?)	40,000 [11.7]	28,600 [8.4]	11,400 [3.3]	11.70	13.50	74	1,225 [578]
	RCQD-3624A* (-GRM-10?ZAJ?)	39,500 [11.6]	27,850 [8.2]	11,650 [3.4]	11.80	14.00	74	1,150 [543]
	RCQD-3624A* (-GRM-12?RAJ?)	40,000 [11.7]	28,550 [8.4]	11,450 [3.4]	11.95	14.00	74	1,225 [578]
	-HKL-HM3617 (RCSL-H*3617)	39,000 [11.4]	27,700 [8.1]	11,300 [3.3]	11.95	14.00	74	1,200 [566]
	-HLL-HM3617 (RCSL-H*3617)	39,000 [11.4]	27,700 [8.1]	11,300 [3.3]	11.95	14.00	74	1,200 [566]
	-HSL-HM3617 (RCSL-H*3617)	37,800 [11.1]	26,200 [7.7]	11,600 [3.4]	11.20	13.00	74	1,100 [519]
	-HSL-HM3621 (RCSL-H*3621)	37,800 [11.1]	26,200 [7.7]	11,600 [3.4]	11.20	13.00	74	1,100 [519]
	RCFL-H*4821 ①	41,500 [12.2]	29,700 [8.7]	11,800 [3.5]	10.90	13.00	74	1,400 [661]
	RCFL-A*4821	41,500 [12.2]	29,700 [8.7]	11,800 [3.5]	10.90	13.00	74	1,400 [661]
	RCFL-A*4821 (-GFD-09?ZCM?)	41,500 [12.2]	29,200 [8.6]	12,300 [3.6]	11.20	13.00	74	1,325 [625]
	RCFL-A*4821 (-GFD-10?ZCM?)	41,500 [12.2]	29,250 [8.6]	12,250 [3.6]	11.05	13.00	74	1,325 [625]
	RCFL-A*4821 (-GFE-09?ZCM?)	41,500 [12.2]	29,700 [8.7]	11,800 [3.5]	11.05	13.00	74	1,400 [661]
	RCFL-A*4821 (-GFE-10?ZCM?)	41,000 [12.0]	28,100 [8.2]	12,900 [3.8]	11.35	13.00	74	1,225 [578]
	RCFL-A*4821 (-GGD-09?ZCM?)	41,500 [12.2]	29,650 [8.7]	11,850 [3.5]	11.15	13.00	74	1,425 [672]
043JEZ	RCFL-A*4821 (-GGD-10?ZCM?)	41,500 [12.2]	29,650 [8.7]	11,850 [3.5]	11.15	13.00	74	1,425 [672]
	RCFL-A*4821 (-GGE-06?MCK?)	41,000 [12.0]	28,050 [8.2]	12,950 [3.8]	11.15	13.00	74	1,200 [566]
	RCFL-A*4821 (-GGE-07?MCK?)	40,500 [11.9]	27,550 [8.1]	12,950 [3.8]	11.05	13.00	74	1,200 [566]
	RCFL-A*4821 (-GGE-09?ZCM?)	41,500 [12.2]	29,650 [8.7]	11,850 [3.5]	11.20	13.00	74	1,400 [661]
	RCFL-A*4821 (-GGE-10?ZCM?)	41,500 [12.2]	29,650 [8.7]	11,850 [3.5]	11.10	13.00	74	1,400 [661]
	RCFL-A*4821 (-GLE-07?AMK?)	41,000 [12.0]	28,000 [8.2]	13,000 [3.8]	11.30	13.00	74	1,200 [566]
	RCFL-A*4821 (-GLE-10?BRM?)	41,500 [12.2]	28,400 [8.3]	13,100 [3.8]	11.75	14.00	74	1,200 [566]
	RCFL-A*4821 (-GLR-07?BRQ?)	42,000 [12.3]	30,100 [8.8]	11,900 [3.5]	11.40	13.50	74	1,425 [672]
	RCFL-A*4821 (-GLR-10?BRM?)	42,000 [12.3]	30,050 [8.8]	11,950 [3.5]	11.55	13.50	74	1,375 [649]

① Highest sales volume tested combination required by D.O.E. test procedures.

[ ] Designates Metric Conversions

Performance Data @ AHRI Standard Conditions—Cooling: UANL- JEZ (continued)

Model Numbers		80°F [26.5°C] DB/67°F [19.5°C] WB Indoor Air 95°F [35°C] DB Outdoor Air					Sound Rating dB	Indoor CFM [L/s]
Outdoor Unit UANL-	Indoor Coil and/or Air Handler	Total Capacity BTU/H [kW]	Net Sensible BTU/H [kW]	Net Latent BTU/H [kW]	EER	SEER		
Rev. 7/1/2010	RCFL-A*4821 (RGLT-07?AME?)	41,500 [12.2]	29,400 [8.6]	12,100 [3.5]	11.00	13.00	74	1,350 [637]
	RCFL-A*4821 (RGLT-07?BRQ?)	42,000 [12.3]	30,350 [8.9]	11,650 [3.4]	11.00	13.50	74	1,450 [684]
	RCFL-A*4821 (RGLT-10?BRM?)	42,000 [12.3]	30,100 [8.8]	11,900 [3.5]	11.00	13.50	74	1,425 [672]
	RCFL-A*4821 (-GPE-05?BMK?)	41,000 [12.0]	28,050 [8.2]	12,950 [3.8]	11.15	13.00	74	1,200 [566]
	RCFL-A*4821 (-GPE-07?AMK?)	41,000 [12.0]	28,150 [8.2]	12,850 [3.8]	11.25	13.00	74	1,225 [578]
	RCFL-A*4821 (-GPE-07?BRQ?)	42,000 [12.3]	30,100 [8.8]	11,900 [3.5]	11.45	13.50	74	1,400 [661]
	RCFL-A*4821 (-GPE-10?BRM?)	42,000 [12.3]	30,100 [8.8]	11,900 [3.5]	11.45	13.50	74	1,400 [661]
	RCFL-A*4821 (-GPR-07?BRQ?)	42,000 [12.3]	30,050 [8.8]	11,950 [3.5]	11.50	13.50	74	1,400 [661]
	RCFL-A*4821 (-GPR-10?BRM?)	42,000 [12.3]	30,100 [8.8]	11,900 [3.5]	11.30	13.00	74	1,425 [672]
	RCFL-A*4821 (RGPT-05?BMK?)	41,000 [12.0]	28,200 [8.3]	12,800 [3.8]	11.00	13.00	74	1,225 [578]
	RCFL-A*4821 (RGPT-07?AME?)	41,000 [12.0]	28,300 [8.3]	12,700 [3.7]	11.00	13.00	74	1,250 [590]
	RCFL-A*4821 (RGPT-07?BRQ?)	41,500 [12.2]	28,650 [8.4]	12,850 [3.8]	11.50	14.00	74	1,250 [590]
	RCFL-A*4821 (RGPT-10?BRM?)	42,000 [12.3]	30,050 [8.8]	11,950 [3.5]	11.00	13.50	74	1,425 [672]
	RCFL-A*4821 (-GRM-09?ZAJ?)	41,000 [12.0]	28,150 [8.2]	12,850 [3.8]	11.25	13.00	74	1,225 [578]
	RCFL-A*4821 (-GRM-10?ZAJ?)	40,500 [11.9]	27,250 [8.0]	13,250 [3.9]	11.30	13.00	74	1,150 [543]
	RCFL-A*4821 (-GRM-12?RAJ?)	41,500 [12.2]	29,650 [8.7]	11,850 [3.5]	11.15	13.00	74	1,425 [672]
	RCFL-A*4821 (-GTM-06?MAE?)	41,000 [12.0]	28,100 [8.2]	12,900 [3.8]	11.05	13.00	74	1,225 [578]
	RCFL-A*4821 (-GTM-07?RBG?)	41,500 [12.2]	29,000 [8.5]	12,500 [3.7]	11.55	13.50	74	1,325 [625]
	RCFL-A*4821 (-GTM-09?ZAJ?)	41,500 [12.2]	28,600 [8.4]	12,900 [3.8]	11.60	14.00	74	1,250 [590]
	ROCA-070E03 (RCFL-A*4821)	41,000 [12.0]	28,000 [8.2]	13,000 [3.8]	11.00	13.00	74	1,200 [566]
	ROCA-070E04 (RCFL-A*4821)	41,000 [12.0]	28,000 [8.2]	13,000 [3.8]	11.00	13.00	74	1,200 [566]
	ROLA-070E03 (RCFL-A*4821)	41,000 [12.0]	27,800 [8.1]	13,200 [3.9]	11.00	13.50	74	1,175 [554]
	ROLA-070E04 (RCFL-A*4821)	42,000 [12.3]	30,100 [8.8]	11,900 [3.5]	11.00	13.50	74	1,375 [649]
	ROLA-115E05 (RCFL-A*4821)	41,000 [12.0]	27,900 [8.2]	13,100 [3.8]	11.50	13.50	74	1,200 [566]
	RCFL-A*4824	41,500 [12.2]	29,700 [8.7]	11,800 [3.5]	10.90	13.00	74	1,400 [661]
	RCFL-A*4824 (-GFD-09?ZCM?)	41,500 [12.2]	29,250 [8.6]	12,250 [3.6]	11.15	13.00	74	1,325 [625]
	RCFL-A*4824 (-GFD-10?ZCM?)	41,000 [12.0]	28,750 [8.4]	12,250 [3.6]	11.05	13.00	74	1,325 [625]
043JEZ	RCFL-A*4824 (-GFD-12?RCM?)	42,000 [12.3]	30,600 [9.0]	11,400 [3.3]	11.15	13.00	74	1,475 [696]
	RCFL-A*4824 (-GFE-09?ZCM?)	42,500 [12.5]	30,450 [8.9]	12,050 [3.5]	11.10	13.00	74	1,400 [661]
	RCFL-A*4824 (-GFE-10?ZCM?)	42,500 [12.5]	30,450 [8.9]	12,050 [3.5]	10.95	13.00	74	1,425 [672]
	RCFL-A*4824 (-GFE-12?RCM?)	42,000 [12.3]	28,800 [8.4]	13,200 [3.9]	11.60	14.00	74	1,225 [578]
	RCFL-A*4824 (-GGD-09?ZCM?)	41,500 [12.2]	29,650 [8.7]	11,850 [3.5]	11.15	13.00	74	1,425 [672]
	RCFL-A*4824 (-GGD-10?ZCM?)	41,500 [12.2]	29,650 [8.7]	11,850 [3.5]	11.15	13.00	74	1,425 [672]
	RCFL-A*4824 (-GGD-12?RCM?)	42,000 [12.3]	30,400 [8.9]	11,600 [3.4]	11.40	13.50	74	1,450 [684]
	RCFL-A*4824 (-GGE-09?ZCM?)	42,500 [12.5]	30,400 [8.9]	12,100 [3.5]	11.25	13.00	74	1,400 [661]
	RCFL-A*4824 (-GGE-10?ZCM?)	42,500 [12.5]	30,450 [8.9]	12,050 [3.5]	11.10	13.00	74	1,400 [661]
	RCFL-A*4824 (-GGE-12?RCM?)	42,000 [12.3]	28,650 [8.4]	13,350 [3.9]	11.70	14.00	74	1,200 [566]
	RCFL-A*4824 (-GLE-10?BRM?)	42,000 [12.3]	28,600 [8.4]	13,400 [3.9]	11.80	14.00	74	1,200 [566]
	RCFL-A*4824 (-GLE-12?ARM?)	42,000 [12.3]	28,750 [8.4]	13,250 [3.9]	11.80	14.00	74	1,225 [578]
	RCFL-A*4824 (-GLR-07?BRQ?)	42,000 [12.3]	30,100 [8.8]	11,900 [3.5]	11.40	13.50	74	1,425 [672]
	RCFL-A*4824 (-GLR-10?BRM?)	42,000 [12.3]	30,050 [8.8]	11,950 [3.5]	11.55	13.50	74	1,375 [649]
	RCFL-A*4824 (-GLR-12?ARM?)	42,000 [12.3]	30,050 [8.8]	11,950 [3.5]	11.50	13.50	74	1,425 [672]
	RCFL-A*4824 (RGLT-07?BRQ?)	42,000 [12.3]	30,350 [8.9]	11,650 [3.4]	11.00	13.50	74	1,450 [684]
	RCFL-A*4824 (RGLT-10?BRM?)	42,000 [12.3]	30,100 [8.8]	11,900 [3.5]	11.00	13.50	74	1,425 [672]
	RCFL-A*4824 (RGLT-12?ARM?)	42,000 [12.3]	30,000 [8.8]	12,000 [3.5]	11.00	13.50	74	1,375 [649]
	RCFL-A*4824 (-GPE-07?BRQ?)	42,000 [12.3]	28,800 [8.4]	13,200 [3.9]	11.70	14.00	74	1,225 [578]
	RCFL-A*4824 (-GPE-10?BRM?)	42,000 [12.3]	28,750 [8.4]	13,250 [3.9]	11.75	14.00	74	1,225 [578]
	RCFL-A*4824 (-GPE-12?ARM?)	42,000 [12.3]	28,600 [8.4]	13,400 [3.9]	11.80	14.00	74	1,200 [566]
	RCFL-A*4824 (-GPR-07?BRQ?)	42,000 [12.3]	30,050 [8.8]	11,950 [3.5]	11.50	13.50	74	1,400 [661]
	RCFL-A*4824 (-GPR-10?BRM?)	42,000 [12.3]	30,100 [8.8]	11,900 [3.5]	11.30	13.00	74	1,425 [672]
	RCFL-A*4824 (-GPR-12?ARM?)	42,000 [12.3]	30,050 [8.8]	11,950 [3.5]	11.50	13.50	74	1,400 [661]
	RCFL-A*4824 (RGPT-07?BRQ?)	41,500 [12.2]	28,650 [8.4]	12,850 [3.8]	11.50	14.00	74	1,250 [590]
	RCFL-A*4824 (RGPT-10?BRM?)	42,000 [12.3]	30,050 [8.8]	11,950 [3.5]	11.00	13.50	74	1,425 [672]
	RCFL-A*4824 (RGPT-12?ARM?)	42,000 [12.3]	30,000 [8.8]	12,000 [3.5]	11.50	14.00	74	1,375 [649]
	RCFL-A*4824 (-GRM-09?ZAJ?)	41,000 [12.0]	28,150 [8.2]	12,850 [3.8]	11.20	13.00	74	1,225 [578]

① Highest sales volume tested combination required by D.O.E. test procedures.

[ ] Designates Metric Conversions

Performance Data @ AHRI Standard Conditions—Cooling: UANL- JEZ (continued)

Model Numbers		80°F [26.5°C] DB/67°F [19.5°C] WB Indoor Air 95°F [35°C] DB Outdoor Air					Sound Rating dB	Indoor CFM [L/s]
Outdoor Unit UANL-	Indoor Coil and/or Air Handler	Total Capacity BTU/H [kW]	Net Sensible BTU/H [kW]	Net Latent BTU/H [kW]	EER	SEER		
Rev. 7/1/2010	RCFL-A*4824 (-GRM-10?ZAJ?)	40,500 [11.9]	27,250 [8.0]	13,250 [3.9]	11.25	13.00	74	1,150 [543]
	RCFL-A*4824 (-GRM-12?RAJ?)	41,500 [12.2]	29,650 [8.7]	11,850 [3.5]	11.15	13.00	74	1,425 [672]
	RCFL-A*4824 (-GTM-07?RBG?)	42,500 [12.5]	29,900 [8.8]	12,600 [3.7]	11.50	13.50	74	1,325 [625]
	RCFL-A*4824 (-GTM-09?ZAJ?)	42,000 [12.3]	28,950 [8.5]	13,050 [3.8]	11.55	13.50	74	1,250 [590]
	RCFL-A*4824 (-GTM-10?RBJ?)	42,000 [12.3]	28,800 [8.4]	13,200 [3.9]	11.65	14.00	74	1,225 [578]
	ROCA-070E03 (RCFL-A*4824)	41,000 [12.0]	28,000 [8.2]	13,000 [3.8]	11.00	13.50	74	1,200 [566]
	ROCA-070E04 (RCFL-A*4824)	41,000 [12.0]	28,000 [8.2]	13,000 [3.8]	11.00	13.50	74	1,200 [566]
	ROLA-070E03 (RCFL-A*4824)	41,000 [12.0]	27,800 [8.1]	13,200 [3.9]	11.00	13.50	74	1,175 [554]
	ROLA-070E04 (RCFL-A*4824)	42,000 [12.3]	30,100 [8.8]	11,900 [3.5]	11.00	13.50	74	1,375 [649]
	ROLA-115E05 (RCFL-A*4824)	41,000 [12.0]	27,900 [8.2]	13,100 [3.8]	11.50	13.50	74	1,200 [566]
	RCFL-H*4821 (-GFD-09?ZCM?)	41,500 [12.2]	29,200 [8.6]	12,300 [3.6]	11.20	13.00	74	1,325 [625]
	RCFL-H*4821 (-GFD-10?ZCM?)	41,500 [12.2]	29,250 [8.6]	12,250 [3.6]	11.05	13.00	74	1,325 [625]
	RCFL-H*4821 (-GFE-06?MCK?)	41,500 [12.2]	28,350 [8.3]	13,150 [3.9]	11.00	13.00	74	1,200 [566]
	RCFL-H*4821 (-GFE-09?ZCM?)	42,500 [12.5]	30,450 [8.9]	12,050 [3.5]	11.10	13.00	74	1,400 [661]
	RCFL-H*4821 (-GFE-10?ZCM?)	42,500 [12.5]	30,450 [8.9]	12,050 [3.5]	10.95	13.00	74	1,425 [672]
	RCFL-H*4821 (-GGD-09?ZCM?)	41,500 [12.2]	29,650 [8.7]	11,850 [3.5]	11.15	13.00	74	1,425 [672]
	RCFL-H*4821 (-GGD-10?ZCM?)	41,500 [12.2]	29,650 [8.7]	11,850 [3.5]	11.15	13.00	74	1,425 [672]
	RCFL-H*4821 (-GGE-06?MCK?)	41,500 [12.2]	28,250 [8.3]	13,250 [3.9]	11.20	13.00	74	1,200 [566]
	RCFL-H*4821 (-GGE-07?MCK?)	41,500 [12.2]	28,300 [8.3]	13,200 [3.9]	11.15	13.00	74	1,200 [566]
	RCFL-H*4821 (-GGE-09?ZCM?)	42,500 [12.5]	30,400 [8.9]	12,100 [3.5]	11.25	13.00	74	1,400 [661]
	RCFL-H*4821 (-GGE-10?ZCM?)	42,500 [12.5]	30,450 [8.9]	12,050 [3.5]	11.10	13.00	74	1,400 [661]
	RCFL-H*4821 (-GJD-09?ZCM?)	41,500 [12.2]	29,650 [8.7]	11,850 [3.5]	11.15	13.00	74	1,425 [672]
	RCFL-H*4821 (-GJD-10?ZCM?)	41,500 [12.2]	29,650 [8.7]	11,850 [3.5]	11.20	13.00	74	1,425 [672]
	RCFL-H*4821 (-GJF-06?MCK?)	41,500 [12.2]	28,250 [8.3]	13,250 [3.9]	11.25	13.00	74	1,200 [566]
	RCFL-H*4821 (-GJF-07?MCK?)	41,500 [12.2]	28,300 [8.3]	13,200 [3.9]	11.15	13.00	74	1,200 [566]
	RCFL-H*4821 (-GJF-09?ZCM?)	42,500 [12.5]	30,400 [8.9]	12,100 [3.5]	11.25	13.00	74	1,400 [661]
	RCFL-H*4821 (-GJF-10?ZCM?)	42,500 [12.5]	30,400 [8.9]	12,100 [3.5]	11.15	13.00	74	1,400 [661]
043JEZ	RCFL-H*4821 (-GLE-07?AMK?)	42,000 [12.3]	28,750 [8.4]	13,250 [3.9]	11.35	13.50	74	1,200 [566]
	RCFL-H*4821 (-GLE-10?BRM?)	42,000 [12.3]	28,600 [8.4]	13,400 [3.9]	11.80	14.00	74	1,200 [566]
	RCFL-H*4821 (-GLR-07?BRQ?)	42,000 [12.3]	30,100 [8.8]	11,900 [3.5]	11.40	13.50	74	1,425 [672]
	RCFL-H*4821 (-GLR-10?BRM?)	42,000 [12.3]	30,050 [8.8]	11,950 [3.5]	11.55	13.50	74	1,375 [649]
	RCFL-H*4821 (RGLT-07?AME?)	41,500 [12.2]	29,400 [8.6]	12,100 [3.5]	11.00	13.00	74	1,350 [637]
	RCFL-H*4821 (RGLT-07?BRQ?)	42,000 [12.3]	30,350 [8.9]	11,650 [3.4]	11.00	13.50	74	1,450 [684]
	RCFL-H*4821 (RGLT-10?BRM?)	42,000 [12.3]	30,100 [8.8]	11,900 [3.5]	11.00	13.50	74	1,425 [672]
	RCFL-H*4821 (-GPE-05?BMK?)	41,500 [12.2]	28,250 [8.3]	13,250 [3.9]	11.20	13.00	74	1,200 [566]
	RCFL-H*4821 (-GPE-07?AMK?)	42,000 [12.3]	28,900 [8.5]	13,100 [3.8]	11.30	13.50	74	1,225 [578]
	RCFL-H*4821 (-GPE-07?BRQ?)	42,000 [12.3]	28,800 [8.4]	13,200 [3.9]	11.70	14.00	74	1,225 [578]
	RCFL-H*4821 (-GPE-10?BRM?)	42,000 [12.3]	28,750 [8.4]	13,250 [3.9]	11.75	14.00	74	1,225 [578]
	RCFL-H*4821 (-GPR-07?BRQ?)	42,000 [12.3]	30,050 [8.8]	11,950 [3.5]	11.50	13.50	74	1,400 [661]
	RCFL-H*4821 (-GPR-10?BRM?)	42,000 [12.3]	30,100 [8.8]	11,900 [3.5]	11.30	13.00	74	1,425 [672]
	RCFL-H*4821 (RGPT-05?BMK?)	41,000 [12.0]	28,200 [8.3]	12,800 [3.8]	11.00	13.00	74	1,225 [578]
	RCFL-H*4821 (RGPT-07?AME?)	41,000 [12.0]	28,300 [8.3]	12,700 [3.7]	11.00	13.00	74	1,250 [590]
	RCFL-H*4821 (RGPT-07?BRQ?)	41,500 [12.2]	28,650 [8.4]	12,850 [3.8]	11.50	14.00	74	1,250 [590]
	RCFL-H*4821 (RGPT-10?BRM?)	42,000 [12.3]	30,050 [8.8]	11,950 [3.5]	11.00	13.50	74	1,425 [672]
	RCFL-H*4821 (-GRM-09?ZAJ?)	41,000 [12.0]	28,150 [8.2]	12,850 [3.8]	11.25	13.00	74	1,225 [578]
	RCFL-H*4821 (-GRM-10?ZAJ?)	40,500 [11.9]	27,250 [8.0]	13,250 [3.9]	11.30	13.00	74	1,150 [543]
	RCFL-H*4821 (-GRM-12?RAJ?)	41,500 [12.2]	29,650 [8.7]	11,850 [3.5]	11.15	13.00	74	1,425 [672]
	RCFL-H*4821 (-GTM-06?MAE?)	41,500 [12.2]	28,450 [8.3]	13,050 [3.8]	11.00	13.00	74	1,225 [578]
	RCFL-H*4821 (-GTM-07?RBG?)	42,500 [12.5]	29,900 [8.8]	12,600 [3.7]	11.50	13.50	74	1,325 [625]
	RCFL-H*4821 (-GTM-09?ZAJ?)	42,000 [12.3]	28,950 [8.5]	13,050 [3.8]	11.55	13.50	74	1,250 [590]
	ROCA-070E03 (RCFL-H*4821)	41,000 [12.0]	28,000 [8.2]	13,000 [3.8]	11.00	13.50	74	1,200 [566]
	ROCA-070E04 (RCFL-H*4821)	41,000 [12.0]	28,000 [8.2]	13,000 [3.8]	11.00	13.50	74	1,200 [566]
	ROLA-070E03 (RCFL-H*4821)	41,000 [12.0]	27,800 [8.1]	13,200 [3.9]	11.00	13.50	74	1,175 [554]
	ROLA-070E04 (RCFL-H*4821)	42,000 [12.3]	30,100 [8.8]	11,900 [3.5]	11.00	13.50	74	1,375 [649]
	ROLA-115E05 (RCFL-H*4821)	41,000 [12.0]	27,900 [8.2]	13,100 [3.8]	11.50	13.50	74	1,200 [566]

① Highest sales volume tested combination required by D.O.E. test procedures.

[ ] Designates Metric Conversions

Performance Data @ AHRI Standard Conditions—Cooling: UANL- JEZ (continued)

Model Numbers		80°F [26.5°C] DB/67°F [19.5°C] WB Indoor Air 95°F [35°C] DB Outdoor Air					Sound Rating dB	Indoor CFM [L/s]
Outdoor Unit UANL-	Indoor Coil and/or Air Handler	Total Capacity BTU/H [kW]	Net Sensible BTU/H [kW]	Net Latent BTU/H [kW]	EER	SEER		
Rev. 7/1/2010	RCFL-H*4824	41,500 [12.2]	29,700 [8.7]	11,800 [3.5]	10.90	13.00	74	1,400 [661]
	RCFL-H*4824 (-GFD-09?ZCM?)	41,500 [12.2]	29,250 [8.6]	12,250 [3.6]	11.15	13.00	74	1,325 [625]
	RCFL-H*4824 (-GFD-10?ZCM?)	41,000 [12.0]	28,750 [8.4]	12,250 [3.6]	11.05	13.00	74	1,325 [625]
	RCFL-H*4824 (-GFD-12?RCM?)	42,000 [12.3]	30,600 [9.0]	11,400 [3.3]	11.15	13.00	74	1,475 [696]
	RCFL-H*4824 (-GFE-09?ZCM?)	42,500 [12.5]	30,450 [8.9]	12,050 [3.5]	11.05	13.00	74	1,400 [661]
	RCFL-H*4824 (-GFE-10?ZCM?)	42,500 [12.5]	30,500 [8.9]	12,000 [3.5]	10.95	13.00	74	1,425 [672]
	RCFL-H*4824 (-GFE-12?RCM?)	43,000 [12.6]	31,200 [9.1]	11,800 [3.5]	11.30	13.00	74	1,450 [684]
	RCFL-H*4824 (-GGD-09?ZCM?)	41,500 [12.2]	29,650 [8.7]	11,850 [3.5]	11.15	13.00	74	1,425 [672]
	RCFL-H*4824 (-GGD-10?ZCM?)	41,500 [12.2]	29,650 [8.7]	11,850 [3.5]	11.15	13.00	74	1,425 [672]
	RCFL-H*4824 (-GGD-12?RCM?)	42,000 [12.3]	30,400 [8.9]	11,600 [3.4]	11.40	13.50	74	1,450 [684]
	RCFL-H*4824 (-GGE-09?ZCM?)	42,500 [12.5]	30,400 [8.9]	12,100 [3.5]	11.25	13.00	74	1,400 [661]
	RCFL-H*4824 (-GGE-10?ZCM?)	42,500 [12.5]	30,450 [8.9]	12,050 [3.5]	11.10	13.00	74	1,400 [661]
	RCFL-H*4824 (-GGE-12?RCM?)	42,000 [12.3]	28,650 [8.4]	13,350 [3.9]	11.70	14.00	74	1,200 [566]
	RCFL-H*4824 (-GJD-09?ZCM?)	41,500 [12.2]	29,650 [8.7]	11,850 [3.5]	11.15	13.00	74	1,425 [672]
	RCFL-H*4824 (-GJD-10?ZCM?)	41,500 [12.2]	29,650 [8.7]	11,850 [3.5]	11.20	13.00	74	1,425 [672]
	RCFL-H*4824 (-GJD-12?RCM?)	42,000 [12.3]	30,400 [8.9]	11,600 [3.4]	11.40	13.50	74	1,450 [684]
	RCFL-H*4824 (-GJF-09?ZCM?)	42,500 [12.5]	30,400 [8.9]	12,100 [3.5]	11.25	13.00	74	1,400 [661]
	RCFL-H*4824 (-GJF-10?ZCM?)	42,500 [12.5]	30,400 [8.9]	12,100 [3.5]	11.15	13.00	74	1,400 [661]
	RCFL-H*4824 (-GJF-12?RCM?)	42,000 [12.3]	28,650 [8.4]	13,350 [3.9]	11.70	14.00	74	1,200 [566]
	RCFL-H*4824 (-GLE-10?BRM?)	42,000 [12.3]	28,600 [8.4]	13,400 [3.9]	11.80	14.00	74	1,200 [566]
	RCFL-H*4824 (-GLE-12?ARM?)	42,000 [12.3]	28,750 [8.4]	13,250 [3.9]	11.80	14.00	74	1,225 [578]
	RCFL-H*4824 (-GLR-07?BRQ?)	42,000 [12.3]	30,100 [8.8]	11,900 [3.5]	11.40	13.50	74	1,425 [672]
	RCFL-H*4824 (-GLR-10?BRM?)	42,000 [12.3]	30,050 [8.8]	11,950 [3.5]	11.55	13.50	74	1,375 [649]
	RCFL-H*4824 (-GLR-12?ARM?)	42,000 [12.3]	30,050 [8.8]	11,950 [3.5]	11.50	13.50	74	1,425 [672]
	RCFL-H*4824 (RGLT-07?BRQ?)	42,000 [12.3]	30,350 [8.9]	11,650 [3.4]	11.00	13.50	74	1,450 [684]
	RCFL-H*4824 (RGLT-10?BRM?)	42,000 [12.3]	30,100 [8.8]	11,900 [3.5]	11.00	13.50	74	1,425 [672]
	RCFL-H*4824 (RGLT-12?ARM?)	42,000 [12.3]	30,000 [8.8]	12,000 [3.5]	11.00	13.50	74	1,375 [649]
043JEZ	RCFL-H*4824 (-GPE-07?BRQ?)	42,000 [12.3]	28,800 [8.4]	13,200 [3.9]	11.70	14.00	74	1,225 [578]
	RCFL-H*4824 (-GPE-10?BRM?)	42,000 [12.3]	28,750 [8.4]	13,250 [3.9]	11.75	14.00	74	1,225 [578]
	RCFL-H*4824 (-GPE-12?ARM?)	42,000 [12.3]	28,600 [8.4]	13,400 [3.9]	11.80	14.00	74	1,200 [566]
	RCFL-H*4824 (-GPR-07?BRQ?)	42,000 [12.3]	30,050 [8.8]	11,950 [3.5]	11.50	13.50	74	1,400 [661]
	RCFL-H*4824 (-GPR-10?BRM?)	42,000 [12.3]	30,100 [8.8]	11,900 [3.5]	11.30	13.00	74	1,425 [672]
	RCFL-H*4824 (-GPR-12?ARM?)	42,000 [12.3]	30,050 [8.8]	11,950 [3.5]	11.50	13.50	74	1,400 [661]
	RCFL-H*4824 (RGPT-07?BRQ?)	42,000 [12.3]	30,350 [8.9]	11,650 [3.4]	11.00	13.50	74	1,450 [684]
	RCFL-H*4824 (RGPT-10?BRM?)	42,000 [12.3]	30,050 [8.8]	11,950 [3.5]	11.00	13.50	74	1,425 [672]
	RCFL-H*4824 (RGPT-12?ARM?)	42,000 [12.3]	30,000 [8.8]	12,000 [3.5]	11.50	14.00	74	1,375 [649]
	RCFL-H*4824 (-GRM-09?ZAJ?)	41,000 [12.0]	28,150 [8.2]	12,850 [3.8]	11.20	13.00	74	1,225 [578]
	RCFL-H*4824 (-GRM-10?ZAJ?)	40,500 [11.9]	27,250 [8.0]	13,250 [3.9]	11.25	13.00	74	1,150 [543]
	RCFL-H*4824 (-GRM-12?RAJ?)	41,500 [12.2]	29,650 [8.7]	11,850 [3.5]	11.15	13.00	74	1,425 [672]
	RCFL-H*4824 (-GTM-07?RBG?)	42,500 [12.5]	29,900 [8.8]	12,600 [3.7]	11.50	13.50	74	1,325 [625]
	RCFL-H*4824 (-GTM-09?ZAJ?)	42,000 [12.3]	28,950 [8.5]	13,050 [3.8]	11.55	13.50	74	1,250 [590]
	RCFL-H*4824 (-GTM-10?RBJ?)	42,000 [12.3]	28,800 [8.4]	13,200 [3.9]	11.65	14.00	74	1,225 [578]
	ROCA-070E03 (RCFL-H*4824)	41,000 [12.0]	28,000 [8.2]	13,000 [3.8]	11.00	13.00	74	1,200 [566]
	ROCA-070E04 (RCFL-H*4824)	41,000 [12.0]	28,000 [8.2]	13,000 [3.8]	11.00	13.00	74	1,200 [566]
	ROLA-070E03 (RCFL-H*4824)	41,000 [12.0]	27,800 [8.1]	13,200 [3.9]	11.00	13.50	74	1,175 [554]
	ROLA-070E04 (RCFL-H*4824)	42,000 [12.3]	30,100 [8.8]	11,900 [3.5]	11.00	13.50	74	1,375 [649]
	ROLA-115E05 (RCFL-H*4824)	41,000 [12.0]	27,900 [8.2]	13,100 [3.8]	11.50	13.50	74	1,200 [566]
	-BHP-24 (RCHL-48A1)	41,000 [12.0]	28,100 [8.2]	12,900 [3.8]	11.55	14.00	74	1,400 [661]
	RCHL-48A1 (-GLE-10?BRM?)	40,500 [11.9]	27,700 [8.1]	12,800 [3.8]	11.30	13.50	74	1,400 [661]
	RCHL-48A1 (-GLE-12?ARM?)	40,500 [11.9]	27,650 [8.1]	12,850 [3.8]	11.30	13.50	74	1,425 [672]
	RCHL-48A1 (-GPE-07?BRQ?)	40,500 [11.9]	27,700 [8.1]	12,800 [3.8]	11.20	13.50	74	1,400 [661]
	RCHL-48A1 (-GPE-10?BRM?)	40,500 [11.9]	27,700 [8.1]	12,800 [3.8]	11.20	13.50	74	1,400 [661]
	RCHL-48A1 (-GPE-12?ARM?)	40,500 [11.9]	27,700 [8.1]	12,800 [3.8]	11.30	13.50	74	1,425 [672]
	RCQD-4821 (-GFE-06?MCK?)	41,000 [12.0]	28,200 [8.3]	12,800 [3.8]	10.95	13.00	74	1,200 [566]
	RCQD-4821 (-GFE-09?ZCM?)	42,000 [12.3]	30,300 [8.9]	11,700 [3.4]	11.10	13.00	74	1,400 [661]

① Highest sales volume tested combination required by D.O.E. test procedures.

[ ] Designates Metric Conversions

Performance Data @ AHRI Standard Conditions—Cooling: UANL- JEZ (continued)

Model Numbers		80°F [26.5°C] DB/67°F [19.5°C] WB Indoor Air 95°F [35°C] DB Outdoor Air					Sound Rating dB	Indoor CFM [L/s]
Outdoor Unit UANL-	Indoor Coil and/or Air Handler	Total Capacity BTU/H [kW]	Net Sensible BTU/H [kW]	Net Latent BTU/H [kW]	EER	SEER		
Rev. 7/1/2010	RCQD-4821 (-GFE-10?ZCM?)	41,500 [12.2]	28,700 [8.4]	12,800 [3.8]	11.35	13.50	74	1,225 [578]
	RCQD-4821 (-GJF-06?MCK?)	41,500 [12.2]	28,600 [8.4]	12,900 [3.8]	11.20	13.00	74	1,200 [566]
	RCQD-4821 (-GJF-07?MCK?)	41,500 [12.2]	28,650 [8.4]	12,850 [3.8]	11.10	13.00	74	1,200 [566]
	RCQD-4821 (-GJF-09?ZCM?)	42,500 [12.5]	30,750 [9.0]	11,750 [3.4]	11.25	13.00	74	1,400 [661]
	RCQD-4821 (-GJF-10?ZCM?)	42,500 [12.5]	30,750 [9.0]	11,750 [3.4]	11.10	13.00	74	1,400 [661]
	RCQD-4821 (-GPE-05?BMK?)	41,500 [12.2]	28,650 [8.4]	12,850 [3.8]	11.15	13.00	74	1,200 [566]
	RCQD-4821 (-GPE-07?AMK?)	41,500 [12.2]	28,750 [8.4]	12,750 [3.7]	11.25	13.00	74	1,225 [578]
	RCQD-4821 (-GPE-07?BRQ?)	42,000 [12.3]	29,150 [8.5]	12,850 [3.8]	11.70	14.00	74	1,225 [578]
	RCQD-4821 (-GPE-10?BRM?)	42,000 [12.3]	29,150 [8.5]	12,850 [3.8]	11.70	14.00	74	1,225 [578]
	RCQD-4821 (RGPT-05?BMK?)	41,500 [12.2]	28,800 [8.4]	12,700 [3.7]	11.00	13.00	74	1,225 [578]
	RCQD-4821 (RGPT-07?AME?)	42,000 [12.3]	29,850 [8.7]	12,150 [3.6]	11.00	13.00	74	1,325 [625]
	RCQD-4821 (RGPT-07?BRQ?)	42,000 [12.3]	29,100 [8.5]	12,900 [3.8]	11.50	14.00	74	1,225 [578]
	RCQD-4821 (RGPT-10?BRM?)	42,000 [12.3]	29,100 [8.5]	12,900 [3.8]	11.50	14.00	74	1,225 [578]
	ROCA-070E03 (RCQD-4821)	41,500 [12.2]	28,600 [8.4]	12,900 [3.8]	11.00	13.50	74	1,200 [566]
	ROCA-070E04 (RCQD-4821)	41,500 [12.2]	28,600 [8.4]	12,900 [3.8]	11.00	13.50	74	1,200 [566]
	ROLA-070E04 (RCQD-4821)	42,500 [12.5]	30,700 [9.0]	11,800 [3.5]	11.00	13.50	74	1,375 [649]
	ROLA-115E05 (RCQD-4821)	42,000 [12.3]	29,000 [8.5]	13,000 [3.8]	11.50	13.50	74	1,200 [566]
	RCQD-4821A* (-GFD-09?ZCM?)	42,000 [12.3]	29,800 [8.7]	12,200 [3.6]	11.30	13.00	74	1,325 [625]
	RCQD-4821A* (-GFD-10?ZCM?)	42,000 [12.3]	29,850 [8.7]	12,150 [3.6]	11.15	13.00	74	1,325 [625]
	RCQD-4821A* (-GJD-09?ZCM?)	42,500 [12.5]	30,750 [9.0]	11,750 [3.4]	11.25	13.00	74	1,425 [672]
	RCQD-4821A* (-GJD-10?ZCM?)	42,500 [12.5]	30,750 [9.0]	11,750 [3.4]	11.30	13.00	74	1,425 [672]
	RCQD-4821A* (-GJD-12?RCM?)	43,000 [12.6]	31,500 [9.2]	11,500 [3.4]	11.50	13.50	74	1,450 [684]
	RCQD-4821A* (-GPR-07?BRQ?)	42,500 [12.5]	30,650 [9.0]	11,850 [3.5]	11.60	13.50	74	1,400 [661]
	RCQD-4821A* (-GPR-10?BRM?)	42,500 [12.5]	30,700 [9.0]	11,800 [3.5]	11.40	13.50	74	1,425 [672]
	RCQD-4821A* (-GRM-09?ZAJ?)	41,500 [12.2]	28,750 [8.4]	12,750 [3.7]	11.30	13.00	74	1,225 [578]
	RCQD-4821A* (-GRM-10?ZAJ?)	41,500 [12.2]	28,300 [8.3]	13,200 [3.9]	11.35	13.00	74	1,150 [543]
	RCQD-4821A* (-GRM-12?RAJ?)	42,500 [12.5]	30,750 [9.0]	11,750 [3.4]	11.25	13.00	74	1,425 [672]
043JEZ	RCQD-4824 (-GFE-09?ZCM?)	42,500 [12.5]	30,750 [9.0]	11,750 [3.4]	11.15	13.00	74	1,400 [661]
	RCQD-4824 (-GFE-10?ZCM?)	42,000 [12.3]	30,300 [8.9]	11,700 [3.4]	11.05	13.00	74	1,425 [672]
	RCQD-4824 (-GFE-12?RCM?)	42,500 [12.5]	31,000 [9.1]	11,500 [3.4]	11.40	13.50	74	1,450 [684]
	RCQD-4824 (-GJF-09?ZCM?)	42,500 [12.5]	30,700 [9.0]	11,800 [3.5]	11.35	13.00	74	1,400 [661]
	RCQD-4824 (-GJF-10?ZCM?)	42,500 [12.5]	30,750 [9.0]	11,750 [3.4]	11.20	13.00	74	1,400 [661]
	RCQD-4824 (-GJF-12?RCM?)	42,000 [12.3]	29,000 [8.5]	13,000 [3.8]	11.75	14.00	74	1,200 [566]
	RCQD-4824 (-GPE-07?BRQ?)	42,000 [12.3]	29,100 [8.5]	12,900 [3.8]	11.75	14.00	74	1,225 [578]
	RCQD-4824 (-GPE-10?BRM?)	42,000 [12.3]	29,100 [8.5]	12,900 [3.8]	11.75	14.00	74	1,225 [578]
	RCQD-4824 (-GPE-12?ARM?)	42,000 [12.3]	28,950 [8.5]	13,050 [3.8]	11.80	14.00	74	1,200 [566]
	RCQD-4824 (RGPT-07?BRQ?)	42,000 [12.3]	29,250 [8.6]	12,750 [3.7]	11.50	14.00	74	1,250 [590]
	RCQD-4824 (RGPT-10?BRM?)	42,000 [12.3]	29,250 [8.6]	12,750 [3.7]	11.50	14.00	74	1,250 [590]
	RCQD-4824 (RGPT-12?ARM?)	43,000 [12.6]	31,100 [9.1]	11,900 [3.5]	11.50	14.00	74	1,400 [661]
	ROCA-070E03 (RCQD-4824)	41,500 [12.2]	28,550 [8.4]	12,950 [3.8]	11.00	13.50	74	1,200 [566]
	ROCA-070E04 (RCQD-4824)	41,500 [12.2]	28,550 [8.4]	12,950 [3.8]	11.00	13.50	74	1,200 [566]
	ROLA-070E04 (RCQD-4824)	42,500 [12.5]	30,700 [9.0]	11,800 [3.5]	11.00	13.50	74	1,375 [649]
	ROLA-115E05 (RCQD-4824)	42,000 [12.3]	29,000 [8.5]	13,000 [3.8]	11.50	14.00	74	1,200 [566]
	RCQD-4824A* (-GFD-09?ZCM?)	42,000 [12.3]	29,800 [8.7]	12,200 [3.6]	11.40	13.50	74	1,325 [625]
	RCQD-4824A* (-GFD-10?ZCM?)	42,000 [12.3]	29,800 [8.7]	12,200 [3.6]	11.25	13.00	74	1,325 [625]
	RCQD-4824A* (-GFD-12?RCM?)	43,000 [12.6]	31,650 [9.3]	11,350 [3.3]	11.35	13.50	74	1,475 [696]
	RCQD-4824A* (-GJD-09?ZCM?)	42,500 [12.5]	30,700 [9.0]	11,800 [3.5]	11.35	13.50	74	1,425 [672]
	RCQD-4824A* (-GJD-10?ZCM?)	42,500 [12.5]	30,700 [9.0]	11,800 [3.5]	11.35	13.50	74	1,425 [672]
	RCQD-4824A* (-GJD-12?RCM?)	43,000 [12.6]	31,450 [9.2]	11,550 [3.4]	11.60	13.50	74	1,450 [684]
	RCQD-4824A* (-GPR-07?BRQ?)	43,000 [12.6]	31,150 [9.1]	11,850 [3.5]	11.70	13.50	74	1,400 [661]
	RCQD-4824A* (-GPR-10?BRM?)	42,500 [12.5]	30,700 [9.0]	11,800 [3.5]	11.50	13.50	74	1,425 [672]
	RCQD-4824A* (-GPR-12?ARM?)	43,000 [12.6]	31,150 [9.1]	11,850 [3.5]	11.70	13.50	74	1,400 [661]
	RCQD-4824A* (-GRM-09?ZAJ?)	42,000 [12.3]	30,300 [8.9]	11,700 [3.4]	11.10	13.00	74	1,400 [661]
	RCQD-4824A* (-GRM-10?ZAJ?)	41,500 [12.2]	28,300 [8.3]	13,200 [3.9]	11.45	13.50	74	1,150 [543]
	RCQD-4824A* (-GRM-12?RAJ?)	42,500 [12.5]	30,700 [9.0]	11,800 [3.5]	11.35	13.00	74	1,425 [672]

① Highest sales volume tested combination required by D.O.E. test procedures.

[ ] Designates Metric Conversions

Performance Data @ AHRI Standard Conditions—Cooling: UANL- JEZ (continued)

Model Numbers		80°F [26.5°C] DB/67°F [19.5°C] WB Indoor Air 95°F [35°C] DB Outdoor Air					Sound Rating dB	Indoor CFM [L/s]
Outdoor Unit UANL-	Indoor Coil and/or Air Handler	Total Capacity BTU/H [kW]	Net Sensible BTU/H [kW]	Net Latent BTU/H [kW]	EER	SEER		
Rev. 7/1/2010 043JEZ	-HKL-HM4821 (RCSL-H*4821)	42,000 [12.3]	30,000 [8.8]	12,000 [3.5]	11.70	13.50	74	1,400 [661]
	-HLL-HM4821 (RCSL-H*4821)	42,000 [12.3]	30,000 [8.8]	12,000 [3.5]	11.75	14.00	74	1,400 [661]
	-HSL-HM4221 (RCSL-H*4821)	41,000 [12.0]	28,950 [8.5]	12,050 [3.5]	10.85	13.00	74	1,350 [637]
048JEZ	RCFL-H*4821 ①	48,000 [14.1]	33,850 [9.9]	14,150 [4.1]	11.90	14.00	74	1,475 [696]
049JEZ	RCFL-H*4821 ①	46,500 [13.6]	33,250 [9.7]	13,250 [3.9]	11.05	13.00	74	1,550 [731]
	RCFL-A*4821	46,500 [13.6]	33,250 [9.7]	13,250 [3.9]	11.05	13.00	74	1,550 [731]
	RCFL-A*4821 (-GFE-09?ZCM?)	46,500 [13.6]	32,100 [9.4]	14,400 [4.2]	11.15	13.00	74	1,400 [661]
	RCFL-A*4821 (-GGE-09?ZCM?)	46,500 [13.6]	32,050 [9.4]	14,450 [4.2]	11.30	13.00	74	1,400 [661]
	RCFL-A*4821 (-GGE-10?ZCM?)	46,500 [13.6]	32,100 [9.4]	14,400 [4.2]	11.20	13.00	74	1,400 [661]
	RCFL-A*4821 (-GLE-10?BRM?)	47,000 [13.8]	32,450 [9.5]	14,550 [4.3]	11.70	13.50	74	1,400 [661]
	RCFL-A*4821 (-GLR-07?BRQ?)	48,000 [14.1]	36,150 [10.6]	11,850 [3.5]	11.40	13.00	74	1,625 [767]
	RCFL-A*4821 (-GLR-10?BRM?)	47,500 [13.9]	35,300 [10.3]	12,200 [3.6]	11.45	13.00	74	1,575 [743]
	RCFL-A*4821 (RGLT-07?BRQ?)	46,500 [13.6]	32,350 [9.5]	14,150 [4.1]	11.00	13.50	74	1,425 [672]
	RCFL-A*4821 (RGLT-10?BRM?)	46,000 [13.5]	31,700 [9.3]	14,300 [4.2]	11.00	13.50	74	1,400 [661]
	RCFL-A*4821 (-GPE-07?BRQ?)	47,000 [13.8]	32,500 [9.5]	14,500 [4.2]	11.55	13.50	74	1,400 [661]
	RCFL-A*4821 (-GPE-10?BRM?)	47,500 [13.9]	34,550 [10.1]	12,950 [3.8]	11.25	13.00	74	1,625 [767]
	RCFL-A*4821 (-GPR-07?BRQ?)	48,000 [14.1]	36,150 [10.6]	11,850 [3.5]	11.45	13.00	74	1,625 [767]
	RCFL-A*4821 (RGPT-07?BRQ?)	46,500 [13.6]	32,300 [9.5]	14,200 [4.2]	11.00	13.50	74	1,425 [672]
	RCFL-A*4821 (RGPT-10?BRM?)	46,000 [13.5]	31,650 [9.3]	14,350 [4.2]	11.00	13.50	74	1,400 [661]
	RCFL-A*4821 (-GTM-07?RBG?)	46,500 [13.6]	31,500 [9.2]	15,000 [4.4]	11.55	13.50	74	1,325 [625]
	RCFL-A*4821 (-GTM-09?ZAJ?)	46,500 [13.6]	32,050 [9.4]	14,450 [4.2]	11.30	13.00	74	1,400 [661]
	ROLA-070E04 (RCFL-A*4821)	46,000 [13.5]	31,550 [9.2]	14,450 [4.2]	11.00	13.00	74	1,375 [649]
	ROLA-115E05 (RCFL-A*4821)	46,000 [13.5]	31,700 [9.3]	14,300 [4.2]	11.00	13.00	74	1,400 [661]
	RCFL-A*4824	46,500 [13.6]	33,250 [9.7]	13,250 [3.9]	11.05	13.00	74	1,550 [731]
	RCFL-A*4824 (-GFD-12?RCM?)	47,000 [13.8]	34,400 [10.1]	12,600 [3.7]	11.15	13.00	74	1,650 [779]
	RCFL-A*4824 (-GFE-09?ZCM?)	46,500 [13.6]	32,100 [9.4]	14,400 [4.2]	11.20	13.00	74	1,400 [661]
	RCFL-A*4824 (-GFE-12?RCM?)	47,000 [13.8]	32,850 [9.6]	14,150 [4.1]	11.40	13.00	74	1,450 [684]
	RCFL-A*4824 (-GGE-09?ZCM?)	46,500 [13.6]	32,050 [9.4]	14,450 [4.2]	11.30	13.00	74	1,400 [661]
	RCFL-A*4824 (-GGE-10?ZCM?)	46,500 [13.6]	32,100 [9.4]	14,400 [4.2]	11.20	13.00	74	1,400 [661]
	RCFL-A*4824 (-GGE-12?RCM?)	47,000 [13.8]	33,550 [9.8]	13,450 [3.9]	11.25	13.00	74	1,575 [743]
	RCFL-A*4824 (-GLE-10?BRM?)	47,500 [13.9]	34,350 [10.1]	13,150 [3.9]	11.45	13.50	74	1,600 [755]
	RCFL-A*4824 (-GLE-12?ARM?)	47,500 [13.9]	34,350 [10.1]	13,150 [3.9]	11.40	13.50	74	1,600 [755]
	RCFL-A*4824 (-GLR-07?BRQ?)	47,000 [13.8]	34,200 [10.0]	12,800 [3.8]	11.20	13.00	74	1,625 [767]
	RCFL-A*4824 (-GLR-10?BRM?)	46,500 [13.6]	33,200 [9.7]	13,300 [3.9]	11.25	13.00	74	1,575 [743]
	RCFL-A*4824 (-GLR-12?ARM?)	47,000 [13.8]	34,000 [10.0]	13,000 [3.8]	11.35	13.00	74	1,600 [755]
	RCFL-A*4824 (RGLT-07?BRQ?)	46,500 [13.6]	32,350 [9.5]	14,150 [4.1]	11.00	13.50	74	1,425 [672]
	RCFL-A*4824 (RGLT-10?BRM?)	46,000 [13.5]	31,700 [9.3]	14,300 [4.2]	11.00	13.50	74	1,400 [661]
	RCFL-A*4824 (RGLT-12?ARM?)	46,000 [13.5]	31,300 [9.2]	14,700 [4.3]	11.00	13.50	74	1,350 [637]
	RCFL-A*4824 (-GPE-07?BRQ?)	47,000 [13.8]	32,500 [9.5]	14,500 [4.2]	11.55	13.50	74	1,400 [661]
	RCFL-A*4824 (-GPE-10?BRM?)	47,500 [13.9]	34,000 [10.0]	13,500 [4.0]	11.50	13.50	74	1,550 [731]
	RCFL-A*4824 (-GPE-12?ARM?)	47,500 [13.9]	34,500 [10.1]	13,000 [3.8]	11.45	13.50	74	1,625 [767]
	RCFL-A*4824 (-GPR-07?BRQ?)	47,000 [13.8]	34,200 [10.0]	12,800 [3.8]	11.30	13.00	74	1,625 [767]
	RCFL-A*4824 (-GPR-12?ARM?)	46,500 [13.6]	33,200 [9.7]	13,300 [3.9]	11.30	13.00	74	1,575 [743]
	RCFL-A*4824 (RGPT-07?BRQ?)	46,500 [13.6]	32,300 [9.5]	14,200 [4.2]	11.00	13.50	74	1,425 [672]
	RCFL-A*4824 (RGPT-10?BRM?)	46,500 [13.6]	32,300 [9.5]	14,200 [4.2]	11.00	13.50	74	1,425 [672]
	RCFL-A*4824 (RGPT-12?ARM?)	46,000 [13.5]	31,300 [9.2]	14,700 [4.3]	11.00	13.50	74	1,350 [637]
	RCFL-A*4824 (-GTM-07?RBG?)	46,500 [13.6]	31,500 [9.2]	15,000 [4.4]	11.55	13.50	74	1,325 [625]
	RCFL-A*4824 (-GTM-09?ZAJ?)	46,500 [13.6]	32,050 [9.4]	14,450 [4.2]	11.30	13.00	74	1,400 [661]
	RCFL-A*4824 (-GTM-10?RBJ?)	47,000 [13.8]	32,650 [9.6]	14,350 [4.2]	11.45	13.50	74	1,425 [672]
	ROLA-070E04 (RCFL-A*4824)	46,000 [13.5]	31,550 [9.2]	14,450 [4.2]	11.00	13.00	74	1,375 [649]
	ROLA-115E05 (RCFL-A*4824)	46,000 [13.5]	31,700 [9.3]	14,300 [4.2]	11.00	13.00	74	1,400 [661]
	RCFL-H*4821 (-GFE-09?ZCM?)	46,500 [13.6]	32,100 [9.4]	14,400 [4.2]	11.20	13.00	74	1,400 [661]
	RCFL-H*4821 (-GGE-09?ZCM?)	46,500 [13.6]	32,050 [9.4]	14,450 [4.2]	11.30	13.00	74	1,400 [661]
	RCFL-H*4821 (-GGE-10?ZCM?)	46,500 [13.6]	32,100 [9.4]	14,400 [4.2]	11.20	13.00	74	1,400 [661]
	RCFL-H*4821 (-GJF-09?ZCM?)	46,500 [13.6]	32,050 [9.4]	14,450 [4.2]	11.35	13.00	74	1,400 [661]

① Highest sales volume tested combination required by D.O.E. test procedures.

[ ] Designates Metric Conversions

Performance Data @ AHRI Standard Conditions—Cooling: UANL- JEZ (continued)

Model Numbers		80°F [26.5°C] DB/67°F [19.5°C] WB Indoor Air 95°F [35°C] DB Outdoor Air					Sound Rating dB	Indoor CFM [L/s]
Outdoor Unit UANL-	Indoor Coil and/or Air Handler	Total Capacity BTU/H [kW]	Net Sensible BTU/H [kW]	Net Latent BTU/H [kW]	EER	SEER		
Rev. 7/1/2010	RCFL-H*4821 (-GJF-10?ZCM?)	46,500 [13.6]	32,100 [9.4]	14,400 [4.2]	11.25	13.00	74	1,400 [661]
	RCFL-H*4821 (-GLE-10?BRM?)	47,500 [13.9]	34,350 [10.1]	13,150 [3.9]	11.45	13.50	74	1,600 [755]
	RCFL-H*4821 (-GLR-07?BRQ?)	48,000 [14.1]	36,150 [10.6]	11,850 [3.5]	11.40	13.00	74	1,625 [767]
	RCFL-H*4821 (-GLR-10?BRM?)	47,500 [13.9]	35,300 [10.3]	12,200 [3.6]	11.45	13.00	74	1,575 [743]
	RCFL-H*4821 (RGLT-07?BRQ?)	46,500 [13.6]	32,350 [9.5]	14,150 [4.1]	11.00	13.50	74	1,425 [672]
	RCFL-H*4821 (RGLT-10?BRM?)	46,000 [13.5]	31,700 [9.3]	14,300 [4.2]	11.00	13.50	74	1,400 [661]
	RCFL-H*4821 (-GPE-07?BRQ?)	47,500 [13.9]	34,400 [10.1]	13,100 [3.8]	11.20	13.00	74	1,600 [755]
	RCFL-H*4821 (-GPE-10?BRM?)	47,500 [13.9]	34,000 [10.0]	13,500 [4.0]	11.50	13.50	74	1,550 [731]
	RCFL-H*4821 (-GPR-07?BRQ?)	48,000 [14.1]	36,150 [10.6]	11,850 [3.5]	11.45	13.00	74	1,625 [767]
	RCFL-H*4821 (RGPT-07?BRQ?)	46,500 [13.6]	32,300 [9.5]	14,200 [4.2]	11.00	13.50	74	1,425 [672]
	RCFL-H*4821 (RGPT-10?BRM?)	46,500 [13.6]	32,300 [9.5]	14,200 [4.2]	11.00	13.50	74	1,425 [672]
	RCFL-H*4821 (-GTM-07?RBG?)	46,500 [13.6]	31,500 [9.2]	15,000 [4.4]	11.55	13.50	74	1,325 [625]
	RCFL-H*4821 (-GTM-09?ZAJ?)	46,500 [13.6]	32,050 [9.4]	14,450 [4.2]	11.30	13.00	74	1,400 [661]
	ROLA-070E04 (RCFL-H*4821)	46,000 [13.5]	31,550 [9.2]	14,450 [4.2]	11.00	13.00	74	1,375 [649]
	ROLA-115E05 (RCFL-H*4821)	46,000 [13.5]	31,700 [9.3]	14,300 [4.2]	11.00	13.00	74	1,400 [661]
	RCFL-H*4824	46,500 [13.6]	33,250 [9.7]	13,250 [3.9]	11.05	13.00	74	1,550 [731]
	RCFL-H*4824 (-GFD-12?RCM?)	47,000 [13.8]	34,400 [10.1]	12,600 [3.7]	11.15	13.00	74	1,650 [779]
	RCFL-H*4824 (-GFE-09?ZCM?)	46,500 [13.6]	32,100 [9.4]	14,400 [4.2]	11.15	13.00	74	1,400 [661]
	RCFL-H*4824 (-GFE-12?RCM?)	47,000 [13.8]	32,850 [9.6]	14,150 [4.1]	11.40	13.00	74	1,450 [684]
	RCFL-H*4824 (-GGE-09?ZCM?)	46,500 [13.6]	32,050 [9.4]	14,450 [4.2]	11.30	13.00	74	1,400 [661]
	RCFL-H*4824 (-GGE-10?ZCM?)	46,500 [13.6]	32,100 [9.4]	14,400 [4.2]	11.20	13.00	74	1,400 [661]
	RCFL-H*4824 (-GGE-12?RCM?)	47,000 [13.8]	33,550 [9.8]	13,450 [3.9]	11.25	13.00	74	1,575 [743]
	RCFL-H*4824 (-GJF-09?ZCM?)	46,500 [13.6]	32,050 [9.4]	14,450 [4.2]	11.35	13.00	74	1,400 [661]
	RCFL-H*4824 (-GJF-10?ZCM?)	46,500 [13.6]	32,100 [9.4]	14,400 [4.2]	11.25	13.00	74	1,400 [661]
	RCFL-H*4824 (-GJF-12?RCM?)	47,000 [13.8]	33,550 [9.8]	13,450 [3.9]	11.30	13.00	74	1,575 [743]
	RCFL-H*4824 (-GLE-10?BRM?)	47,500 [13.9]	34,350 [10.1]	13,150 [3.9]	11.45	13.50	74	1,600 [755]
	RCFL-H*4824 (-GLE-12?ARM?)	47,500 [13.9]	34,350 [10.1]	13,150 [3.9]	11.40	13.50	74	1,600 [755]
049JEZ	RCFL-H*4824 (-GLR-07?BRQ?)	47,000 [13.8]	34,200 [10.0]	12,800 [3.8]	11.20	13.00	74	1,625 [767]
	RCFL-H*4824 (-GLR-10?BRM?)	46,500 [13.6]	33,200 [9.7]	13,300 [3.9]	11.25	13.00	74	1,575 [743]
	RCFL-H*4824 (-GLR-12?ARM?)	47,000 [13.8]	34,000 [10.0]	13,000 [3.8]	11.35	13.00	74	1,600 [755]
	RCFL-H*4824 (RGLT-07?BRQ?)	46,500 [13.6]	32,350 [9.5]	14,150 [4.1]	11.00	13.50	74	1,425 [672]
	RCFL-H*4824 (RGLT-10?BRM?)	46,000 [13.5]	31,700 [9.3]	14,300 [4.2]	11.00	13.50	74	1,400 [661]
	RCFL-H*4824 (RGLT-12?ARM?)	46,000 [13.5]	31,300 [9.2]	14,700 [4.3]	11.00	13.50	74	1,350 [637]
	RCFL-H*4824 (-GPE-07?BRQ?)	47,500 [13.9]	34,400 [10.1]	13,100 [3.8]	11.20	13.00	74	1,600 [755]
	RCFL-H*4824 (-GPE-10?BRM?)	47,500 [13.9]	34,550 [10.1]	12,950 [3.8]	11.30	13.00	74	1,625 [767]
	RCFL-H*4824 (-GPE-12?ARM?)	47,500 [13.9]	34,500 [10.1]	13,000 [3.8]	11.45	13.50	74	1,625 [767]
	RCFL-H*4824 (-GPR-07?BRQ?)	47,000 [13.8]	34,200 [10.0]	12,800 [3.8]	11.25	13.00	74	1,625 [767]
	RCFL-H*4824 (-GPR-12?ARM?)	46,500 [13.6]	33,200 [9.7]	13,300 [3.9]	11.30	13.00	74	1,575 [743]
	RCFL-H*4824 (RGPT-07?BRQ?)	46,500 [13.6]	32,300 [9.5]	14,200 [4.2]	11.00	13.50	74	1,425 [672]
	RCFL-H*4824 (RGPT-10?BRM?)	46,500 [13.6]	32,300 [9.5]	14,200 [4.2]	11.00	13.50	74	1,425 [672]
	RCFL-H*4824 (RGPT-12?ARM?)	46,000 [13.5]	31,300 [9.2]	14,700 [4.3]	11.00	13.50	74	1,350 [637]
	RCFL-H*4824 (-GTM-07?RBG?)	46,500 [13.6]	31,650 [9.3]	14,850 [4.4]	11.60	14.00	74	1,325 [625]
	RCFL-H*4824 (-GTM-09?ZAJ?)	46,500 [13.6]	32,200 [9.4]	14,300 [4.2]	11.35	13.50	74	1,400 [661]
	RCFL-H*4824 (-GTM-10?RBJ?)	47,000 [13.8]	32,850 [9.6]	14,150 [4.1]	11.55	13.50	74	1,425 [672]
	ROLA-070E04 (RCFL-H*4824)	46,000 [13.5]	31,550 [9.2]	14,450 [4.2]	11.00	13.00	74	1,375 [649]
	ROLA-115E05 (RCFL-H*4824)	46,000 [13.5]	31,700 [9.3]	14,300 [4.2]	11.00	13.00	74	1,400 [661]
	-BHP-24 (RCHL-48A1)	45,500 [13.3]	31,300 [9.2]	14,200 [4.2]	11.40	13.00	74	1,600 [755]
	RCQD-4821 (RGPT-07?BRQ?)	47,500 [13.9]	33,250 [9.7]	14,250 [4.2]	11.50	14.00	74	1,425 [672]
	RCQD-4821 (RGPT-10?BRM?)	47,500 [13.9]	33,200 [9.7]	14,300 [4.2]	11.50	14.00	74	1,425 [672]
	ROLA-070E04 (RCQD-4821)	46,500 [13.6]	31,550 [9.2]	14,950 [4.4]	11.00	13.50	74	1,375 [649]
	RCQD-4824 (-GFE-09?ZCM?)	47,000 [13.8]	32,650 [9.6]	14,350 [4.2]	11.55	13.50	74	1,400 [661]
	RCQD-4824 (-GFE-10?ZCM?)	47,000 [13.8]	32,850 [9.6]	14,150 [4.1]	11.45	13.50	74	1,425 [672]
	RCQD-4824 (-GFE-12?RCM?)	47,500 [13.9]	33,400 [9.8]	14,100 [4.1]	11.75	14.00	74	1,450 [684]
	RCQD-4824 (-GJF-09?ZCM?)	47,000 [13.8]	32,600 [9.6]	14,400 [4.2]	11.70	13.50	74	1,400 [661]
	RCQD-4824 (-GJF-10?ZCM?)	47,000 [13.8]	32,650 [9.6]	14,350 [4.2]	11.60	13.50	74	1,400 [661]

① Highest sales volume tested combination required by D.O.E. test procedures.

[ ] Designates Metric Conversions

Performance Data @ AHRI Standard Conditions—Cooling: UANL- JEZ (continued)

Model Numbers		80°F [26.5°C] DB/67°F [19.5°C] WB Indoor Air 95°F [35°C] DB Outdoor Air					Sound Rating dB	Indoor CFM [L/s]
Outdoor Unit UANL-	Indoor Coil and/or Air Handler	Total Capacity BTU/H [kW]	Net Sensible BTU/H [kW]	Net Latent BTU/H [kW]	EER	SEER		
Rev. 7/1/2010	RCQD-4824 (-GJF-12?RCM?)	48,000 [14.1]	34,950 [10.2]	13,050 [3.8]	11.70	13.50	74	1,575 [743]
	RCQD-4824 (-GPE-07?BRQ?)	48,000 [14.1]	34,950 [10.2]	13,050 [3.8]	11.65	13.50	74	1,600 [755]
	RCQD-4824 (-GPE-10?BRM?)	48,000 [14.1]	34,950 [10.2]	13,050 [3.8]	11.65	13.50	74	1,625 [767]
	RCQD-4824 (-GPE-12?ARM?)	48,000 [14.1]	34,900 [10.2]	13,100 [3.8]	11.80	13.50	74	1,625 [767]
	RCQD-4824 (RGPT-07?BRQ?)	47,500 [13.9]	33,550 [9.8]	13,950 [4.1]	11.50	14.00	74	1,475 [696]
	RCQD-4824 (RGPT-10?BRM?)	47,500 [13.9]	33,350 [9.8]	14,150 [4.1]	11.50	14.00	74	1,450 [684]
	RCQD-4824 (RGPT-12?ARM?)	47,500 [13.9]	33,000 [9.7]	14,500 [4.2]	11.50	14.00	74	1,400 [661]
	ROCA-070E04 (RCQD-4824)	47,000 [13.8]	32,700 [9.6]	14,300 [4.2]	11.00	13.00	74	1,400 [661]
049JEZ	ROLA-070E04 (RCQD-4824)	47,000 [13.8]	32,400 [9.5]	14,600 [4.3]	11.50	14.00	74	1,375 [649]
	ROLA-115E05 (RCQD-4824)	47,500 [13.9]	33,800 [9.9]	13,700 [4.0]	11.00	13.50	74	1,500 [708]
	RCQD-4824A* (-GRM-12?RAJ?)	47,000 [13.8]	34,650 [10.2]	12,350 [3.6]	11.00	13.00	74	1,625 [767]
	-HKL-HM4821 (RCSL-H*4821)	47,000 [13.8]	33,650 [9.9]	13,350 [3.9]	11.55	13.50	74	1,575 [743]
	-HLL-HM4821 (RCSL-H*4821)	47,000 [13.8]	33,950 [9.9]	13,050 [3.8]	11.65	13.50	74	1,600 [755]
	-HSL-HM4821 (RCSL-H*4821)	46,500 [13.6]	33,250 [9.7]	13,250 [3.9]	11.15	13.00	74	1,525 [720]
	-HKL-HM4824 (RCSL-H*4824)	48,500 [14.2]	36,500 [10.7]	12,000 [3.5]	12.10	14.00	74	1,625 [767]
	-HLL-HM4824 (RCSL-H*4824)	48,500 [14.2]	36,450 [10.7]	12,050 [3.5]	12.15	14.00	74	1,625 [767]
	-HSL-HM4824 (RCSL-H*4824)	47,500 [13.9]	35,000 [10.3]	12,500 [3.7]	11.30	13.00	74	1,525 [720]
	RCFL-H*6024 ①	61,000 [17.9]	42,900 [12.6]	18,100 [5.3]	11.10	13.00	74	1,800 [849]
	RCFL-A*6024	61,000 [17.9]	42,900 [12.6]	18,100 [5.3]	11.10	13.00	74	1,800 [849]
060JEZ	-BHP-25 (RCHL-60A1)	55,500 [16.3]	36,600 [10.7]	18,900 [5.5]	10.75	13.00	74	1,800 [849]
	RCQD-6024A*	58,500 [17.1]	40,250 [11.8]	18,250 [5.3]	10.95	13.00	74	1,800 [849]
	-HKL-HM6024 (RCSL-H*6024)	62,000 [18.2]	43,450 [12.7]	18,550 [5.4]	11.70	13.50	74	1,800 [849]
	-HLL-HM6024 (RCSL-H*6024)	62,000 [18.2]	43,500 [12.7]	18,500 [5.4]	11.70	13.50	74	1,800 [849]

① Highest sales volume tested combination required by D.O.E. test procedures.

[ ] Designates Metric Conversions

Electrical and Physical Data: UANL- JEZ

Model Number UANL-	ELECTRICAL							PHYSICAL					
	Phase Frequency (Hz) Voltage (Volts)	Compressor		Fan Motor Full Load Amperes (FLA)	Minimum Circuit Ampacity Amperes	Fuse or HACR Circuit Breaker		Outdoor Coil			Refrig. Per Circuit Oz. [g]	Weight	
		Rated Load Amperes (RLA)	Locked Rotor Amperes (LRA)			Minimum Amperes	Maximum Amperes	Face Area Sq. Ft. [m²]	No. Rows	CFM [L/s]		Net Lbs. [kg]	Shipping Lbs. [kg]
Rev. 7/1/10													
024JEZ	1-60-208/230	12.8/12.8	58.3	0.6	17/17	20/20	25/25	11.00 [1.02]	1	1920 [906]	72 [2041]	148 [67.1]	158 [71.7]
031JEZ	1-60-208/230	14.1/14.1	73	0.6	19/19	25/25	30/30	11.06 [1.03]	1	1920 [906]	83 [2353]	151 [68.5]	152.5 [69.2]
037JEZ	1-60-208/230	17.9/17.9	112	1.2	24/24	30/30	40/40	16.10 [1.5]	1	3200 [1510]	106 [3005]	201 [91.2]	211.5 [95.9]
043JEZ	1-60-208/230	19.9/19.9	109	1.2	27/27	35/35	45/45	16.10 [1.5]	1	3200 [1510]	115 [3260]	210 [95.3]	210.5 [95.5]
048JEZ	1-60-208/230	21.8/21.8	117	1.2	29/29	35/35	50/50	23.01 [2.14]	1	3500 [1652]	145 [4111]	248 [112.5]	258 [117]
049JEZ	1-60-208/230	21.8/21.8	117	1.2	29/29	35/35	50/50	20.13 [1.87]	1	3500 [1652]	132 [3742]	222 [100.7]	233.5 [105.9]
060JEZ	1-60-208/230	26.3/26.3	134	1.2	35/35	45/45	60/60	23.01 [2.14]	1	3500 [1652]	180 [5103]	258 [117.0]	268 [121.6]

[ ] Designates Metric Conversions

Unit Dimensions

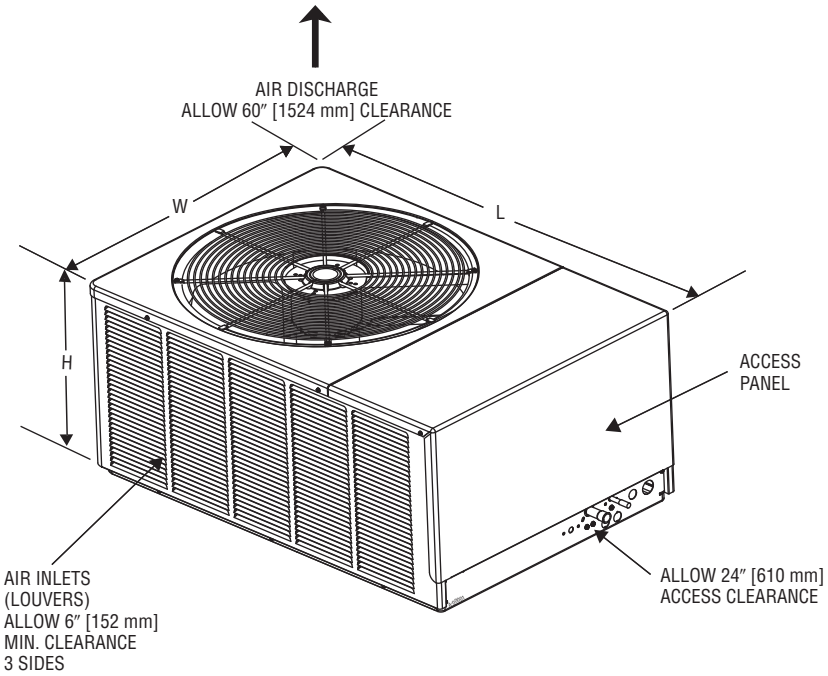

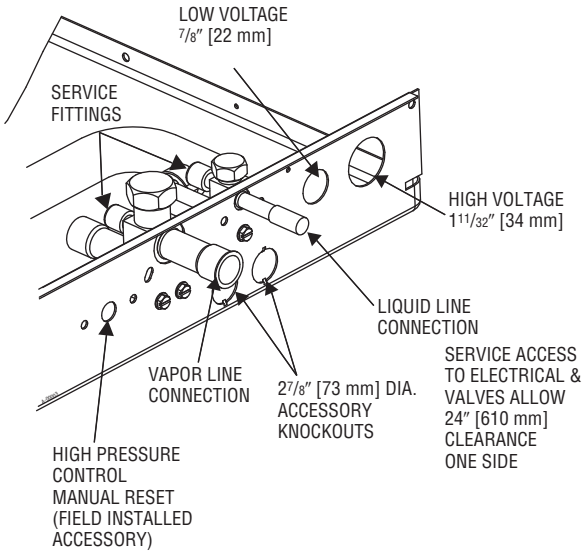

Model Number UANL-	Height "H" (Inches) [mm]	Length "L" (Inches) [mm]	Width "W" (Inches) [mm]
024JEZ/031JEZ	19 [483]	40 1/2 [1029]	27 5/8 [702]
037JEZ/043JEZ	23 [584]	44 3/8 [1127]	31 1/2 [800]
049JEZ	29 [723]	44 3/8 [1127]	31 1/2 [800]
060JEZ	33 [838]	44 3/8 [1127]	31 1/2 [800]

Condensing Unit Refrigerant Line Size Information

Liquid Line Sizing (R-410A)														
System Capacity	Line Size Connection (Inch I.D.)	Line Size (Inch O.D.) [mm]	Liquid Line Size – Outdoor Unit Above Indoor Coil (Cooling Only – Does not apply to Heat Pumps)						Liquid Line Size – Outdoor Unit Below Indoor Coil					
			Total Equivalent Length—Feet [m]						Total Equivalent Length—Feet [m]					
			25 [7.62]	50 [15.24]	75 [22.86]	100 [30.48]	125 [38.10]	150 [45.72]	25 [7.62]	50 [15.24]	75 [22.86]	100 [30.48]	125 [38.10]	150 [45.72]
			Minimum Vertical Separation—Feet [m]						Maximum Vertical Separation—Feet [m]					
2 Ton	3/8"	1/4 [6.35]	0	3 [0.91]	29 [8.84]	55 [16.76]	81 [24.69]	108 [32.92]	23 [7.01]	N/A	N/A	N/A	N/A	N/A
		5/16 [7.94]	0	0	0	0	0	0	25 [7.62]	36 [10.97]	29 [8.84]	23 [7.01]	16 [4.88]	9 [2.74]
		3/8* [9.53]	0	0	0	0	0	0	25 [7.62]	50 [15.24]	72 [21.95]	70 [21.34]	68 [20.73]	65 [19.81]
2 1/2 Ton	3/8"	1/4 [6.35]	0	14 [4.27]	56 [17.07]	98 [29.87]	N/A	N/A	25 [7.62]	N/A	N/A	N/A	N/A	N/A
		5/16 [7.94]	0	0	0	0	0	0	25 [7.62]	49 [14.94]	38 [11.58]	27 [8.23]	17 [5.18]	6 [1.83]
		3/8* [9.53]	0	0	0	0	0	0	25 [7.62]	50 [15.24]	68 [20.73]	65 [19.81]	62 [18.90]	58 [17.68]
3 Ton	3/8"	5/16 [7.94]	0	0	0	0	0	9 [2.74]	25 [7.62]	50 [15.24]	37 [11.28]	22 [6.71]	7 [2.13]	N/A
		3/8* [9.53]	0	0	0	0	0	0	25 [7.62]	50 [15.24]	68 [20.73]	63 [19.20]	58 [17.68]	53 [16.15]
3 1/2 Ton	3/8"	5/16 [7.94]	0	0	0	16 [4.88]	35 [10.67]	54 [16.46]	25 [7.62]	23 [7.01]	4 [1.22]	N/A	N/A	N/A
		3/8* [9.53]	0	0	0	0	0	0	25 [7.62]	50 [15.24]	43 [13.11]	36 [10.97]	30 [9.14]	24 [7.32]
4 Ton	3/8"	3/8* [9.53]	0	0	0	0	0	0	25 [7.62]	46 [14.02]	38 [11.58]	30 [9.14]	22 [6.71]	15 [4.57]
		1/2 [12.57]	0	0	0	0	0	0	25 [7.62]	50 [15.24]	56 [17.07]	55 [16.76]	53 [16.15]	52 [15.85]
5 Ton	3/8"	3/8* [9.53]	0	0	0	0	0	0	25 [7.62]	50 [15.24]	56 [17.07]	44 [13.41]	32 [9.75]	20 [6.10]
		1/2 [12.57]	0	0	0	0	0	0	25 [7.62]	50 [15.24]	75 [22.86]	81 [24.69]	79 [24.08]	76 [23.16]

NOTES: *Standard line size
N/A = Application not recommended.

Suction Line Length/Size versus Capacity Multiplier (R-410A)							
Unit Size		2 Ton	2 1/2 Ton	3 Ton	3 1/2 Ton	4 Ton	5 Ton
Suction Line Connection Size		3/4" [19.05 mm] I.D.	3/4" [19.05 mm] I.D.	7/8" [22.23 mm] I.D.			
Suction Line Run—Feet [m]		5/8" [15.88 mm] O.D. Opt. 3/4" [19.05 mm] O.D. Std.*	5/8" [15.88 mm] O.D. Opt. 3/4" [19.05 mm] O.D. Std.* 7/8" [22.23 mm] O.D. Opt.	3/4" [19.05 mm] O.D. Opt. 7/8" [22.23 mm] O.D. Std.*		7/8" [22.23 mm] O.D. Opt. 1 1/8" [28.58 mm] O.D. Std.*	
25' [7.62]	Optional	1.00	1.00	1.00	1.00	1.00	1.00
	Standard	1.00	1.00	1.00	1.00	1.00	1.00
	Optional	N/A	1.00	N/A	N/A	N/A	N/A
50' [15.24]	Optional	.98	.96	.98	.99	.99	.99
	Standard	.99	.98	.99	.99	.99	.99
	Optional	N/A	.99	N/A	N/A	N/A	N/A
100' [30.48]	Optional	.95	.94	.96	.96	.96	.97
	Standard	.96	.96	.97	.98	.98	.98
	Optional	N/A	.97	N/A	N/A	N/A	N/A
150' [45.72]	Optional	.92	.91	.94	.94	.95	.94
	Standard	.94	.93	.95	.96	.96	.97
	Optional	N/A	.95	N/A	N/A	N/A	N/A

NOTES: *Standard line size
Using suction line larger than shown in chart will result in poor oil return and is not recommended.

[ ] Designates Metric Conversions

NOTES

NOTES

BEFORE PURCHASING THIS APPLIANCE, READ IMPORTANT ENERGY COST AND EFFICIENCY INFORMATION AVAILABLE FROM YOUR RETAILER.

GENERAL TERMS OF LIMITED WARRANTY

Ruud will furnish a replacement for any part of this product which fails in normal use and service within the applicable period stated, in accordance with the terms of the limited warranty.

***For Complete Details of the Limited Warranty, Including Applicable Terms and Conditions, See Your Local Installer or Contact the Manufacturer for a Copy.**

Compressor .....Ten (10) Years

*Any Other Part .....Ten (10) Years

UANL- JEZ Conditional Replacement Warranty: Ruud will provide a replacement model (if an exact replacement is not available, an equivalent product will be provided) to the original purchaser if the compressor fails within 5 years (providing the unit is installed with a new Ruud Air Handler OR Ruud Indoor Coil with a Ruud Gas Furnace, and is properly matched as specified by Ruud and/or listed in the Air Conditioning Institute (AHRI) published rating, and if additional conditions are satisfied. See product warranty card for additional information.

Before proceeding with installation, refer to installation instructions packaged with each model, as well as complying with all Federal, State, Provincial, and Local codes, regulations, and practices.

Ruud Heating, Cooling and Water Heating

P.O. Box 17010, Fort Smith, AR 72917

"In keeping with its policy of continuous progress and product improvement, Ruud reserves the right to make changes without notice."

PRINTED IN U.S.A. 8-10 DC

FORM NO. A22-187 REV. 7
Supersedes Form No. A22-187 Rev. 6