POOL
MODELS: 259A AND 409A LOW NOx

CATALOG NO. 9100.82
Effective: 08-15-16
Replaces: 05-15-16

RAYPAK REPLACEMENT PARTS

MODEL SIZE: 259A & 409A 84 PROFESSIONAL
MODEL TYPE:
DATE OF MANUFACTURE: 05-01-12 THRU CURRENT

THE PARTS LISTED ARE FOR STANDARD EQUIPMENT FOR THIS MODEL TYPE. RAYPAK RESERVES THE RIGHT TO SUBSTITUTE, DELETE OR CHANGE ANY PART WITHOUT NOTIFICATION. THE ADDITION OF OPTIONS MAY ALSO CHANGE SOME OF THE PARTS. ORDER REPLACEMENT PARTS FROM ACTUAL HEATER COMPONENTS.

FOR DETAILED INSTRUCTIONS, SEE "HOW TO USE YOUR RAYPAK ILLUSTRATED PARTS LIST", CATALOG NO. 9001.10

Raypak®
A Rheem® Company

Raypak, Inc., 2151 Eastman Avenue, Oxnard, CA 93030
(805) 278-5300 Fax (800) 872-9725
Litho In U.S.A.

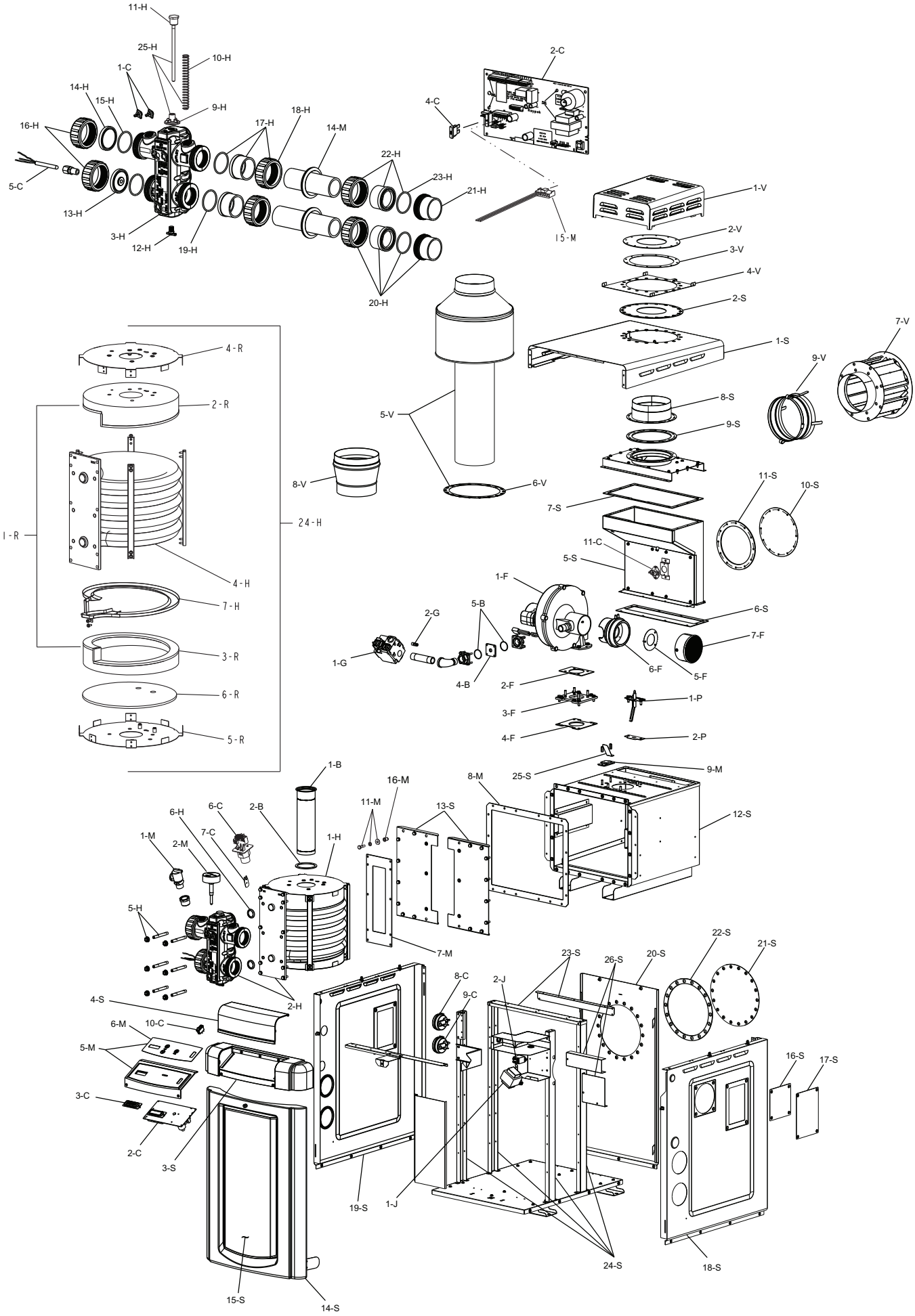
11-H
25-H
10-H
1-C
14-H
15-H
9-H
16-H
17-H
18-H
14-M
5-C
22-H
23-H
21-H
13-H
3-H
12-H
19-H
20-H
2-C
4-C
15-M
1-V
2-V
3-V
4-V
2-S
1-S
7-V
9-V
8-S
9-S
5-V
8-V
6-V
7-S
11-S
10-S
11-C
5-S
1-F
6-S
7-F
2-G
5-B
1-G
4-B
2-F
6-F
5-F
3-F
1-P
4-F
2-P
4-R
2-R
1-R
24-H
4-H
7-H
3-R
6-R
5-R
1-B
16-M
8-M
25-S
9-M
11-M
13-S
12-S
6-H
6-C
2-B
1-M
7-C
1-H
2-M
5-H
7-M
22-S
21-S
23-S
26-S
20-S
8-C
2-J
9-C
2-H
4-S
6-M
10-C
5-M
16-S
17-S
3-C
2-C
3-S
19-S
1-J
24-S
18-S
15-S
14-S

CALL OUT	DESCRIPTION	259A	409A
B	**BURNER**		
1-B	Burner	014077F	014078F
2-B	Gasket seal	014079F	014079F
4-B	Gas Orifice Natural (0-2000 Ft)*	014082F	014081F
	Gas Orifice Natural (2000-5000 Ft)*	014084F	014083F
	Gas Orifice Natural (5000-7000 Ft)*	014203F	014202F
	Gas Orifice Propane (0-2000 Ft)*	014086F	014085F
	Gas Orifice Propane (2000-5000 Ft)*	014088F	014087F
	Gas Orifice Propane (5000-7000 Ft)*	014205F	014204F
5-B	Gas Orifice Flange O Ring	014089F	014089F
C	**CONTROLS**		
1-C	Thermostat Auto Reset 135 Deg Surface Mount	006725F	006725F
2-C	P. C. Board/Control	014090F	014090F
3-C	LCD Display	013640F	013640F
4-C	Fuse 5 AMP	013733F	013733F
5-C	Temperature Sensor	009577F	009577F
6-C	Flow Switch		
	Units manufactured prior to 4/25/16	007142F	007142F
	Units manufactured from 4/25/16	015115F	015115F
7-C	Flow Switch Paddle		
	Units manufactured prior to 4/25/16	010026F	010026F
	Units manufactured from 4/25/16	015831F	015831F
8-C	Switch Air Pressure (Vent)	007158F	007158F
9-C	Switch Air Pressure Differential (Blower)	011760F	011760F
10-C	Rocker Switch	009493F	009493F
11-C	Flue Exhaust Limit	015119F	015119F
F	**FAN**		
1-F	Blower	014091F	014091F
2-F	Blower Gasket	014092F	014092F
3-F	Mounting Plate	014093F	014093F
4-F	Mounting Plate Gasket	014080F	014080F
5-F	Combustion Air Orifice		
	0-2000 Ft	014095F	014175F
	2000-5000 Ft	014208F	014207F
	5000-7000 Ft	014210F	014209F
6-F	Combustion Air Venturi Adapter	014096F	014096F
7-F	Intake Air Vent Cap	012844F	012844F
G	**GAS VALVE**		
1-G	Combination Valve - Nat.	014097F	014097F
	Combination Valve - Pro.	014097F	014097F
2-G	Bleedle Valve 1/8 NPT	007423F	007423F
H	**HEAT EXCHANGER**		
1-H	Heat Transfer (Includes Refractory)	014098F	014099F
2-H	Heat Exchange Assy.Cupro Nickel ASME BR	014100F	014101F
3-H	Inlet/Outlet Header ASME BR Complete	014102F	014103F
	Inlet/Outlet Header ASME BR	014104F	014105F
24-H	Tube Bundle Cupro Nickel ASME ** (Includes Refractory)	015829F	015830F
4-H	Tube Bundle Cupro Nickel ASME **	N/A	N/A
5-H	Stud Bolt Kit (6)	014108F	014108F
6-H	Header Gasket (2)	014109F	014109F
7-H	Condensate Channel	014110F	014110F
25-H	Bypass Assembly	015758F	015759F
9-H	Bypass Valve	006716F	006716F
10-H	Bypass Spring	014112F	014113F
11-H	Bypass Shaft	014114F	014114F
12-H	Drain Valve 1/4 NPT	014158F	014158F
13-H	Inlet CPVC Plug	014115F	014115F
14-H	Outlet CPVC Plug	014116F	014116F
15-H	O Ring	006724F	006724F
16-H	2" CPVC Nut	014160F	014160F
17-H	2" CPVC Connector & Nut	006723F	006723F
18-H	2" CPVC Nut	014160F	014160F
19-H	O Ring	006724F	006724F
20-H	2" PVC Union Adapter	014161F	014161F
21-H	Adapter with Buttress Threads	014162F	014162F
22-H	2" CPVC Connector & Nut	006723F	006723F
23-H	O Ring	006724F	006724F
J	**CONTROL BOX**		
1-J	Transformer 120/240/24V	006736F	006736F
2-J	Blower Relay DPDT 24V	011720F	011720F
M	**MISCELLANEOUS COMPONENTS**		
1-M	PRV 125 PSI	011912F	011912F
2-M	T & P Gauge	014647F	014647F
3-M	Wire Harnesses (All Unit Harnesses)	014117F	014117F
4-M	Blower Harness 120V	014118F	014118F
	Blower Harness 240V	014119F	014119F
15-M	Remote 3 Wire Harness	015518F	015518F
5-M	Control Bezel (Includes Switch Decal)	014120F	014120F
6-M	Switch/Decal-Membrane	014121F	014121F
7-M	Tube Sheet Gasket	014122F	014122F
8-M	Heat Exchanger Seal Gasket	014123F	014123F
9-M	Window Combustion Chamber	006947F	006947F
10-M	Blower / Air Pressure Switch Sample Tube	010348F	010348F
11-M	Fastener Kit (Includes 6 each Bolt & Washers)	014174F	014174F
16-M	Nutsert Kit (Includes Parts to Replace 6 Nutserts)	015970F	015970F
12-M	Touch-up Paint Cool Dark Gray (Not Shown)	750256	750256
13-M	RTV Sealant 2.8 oz (Not Shown)	008924F	008924F
	RTV Sealant 10 oz (Not Shown)	005755F	005755F
14-M	Seal Gaskets	010780F	010780F

*FOR INSTALLATION AT OVER 2,000 FEET ABOVE SEA LEVEL, DERATE 4% PER I,000 FEET ABOVE SEA LEVEL.
**WARNING: The Hydraulic conditions or water chemistry that caused the tube bundle to fail have very likely also damaged the bypass valve. We recommend to inspect the bypass assembly. Failure to do so could cause premature failure of this replacement part.

CALL OUT	DESCRIPTION	259A	409A
P	**PILOT**		
1-P	Igniter Direct Spark	014124F	014124F
2-P	Igniter Gasket	014125F	014125F
3-P	Hi Tension Wire	014126F	014126F
R	**REFRACTORY**		
1-R	Refractory Top & Bottom	014127F	014127F
2-R	Refractory Top	014128F	014128F
3-R	Refractory Bottom	014129F	014129F
4-R	Refractory Support Top	014130F	014130F
5-R	Refractory Support Bottom	014131F	014131F
6-R	Insulation Ceramic Fiber Cut Blanket	015798F	015798F
S	**SHEET METAL / CABINET**		
1-S	Jacket Top	014132F	014132F
2-S	Flue Exhaust Gasket	014133F	014133F
3-S	Front Control Bezel	014134F	014134F
4-S	Control Bezel Cover	014135F	014135F
5-S	Flue Collector	014136F	014136F
6-S	Flue Collector Lower Gasket	014137F	014137F
7-S	Flue Collector Upper Gasket	014138F	014138F
8-S	Flue Exhaust Collar		
	4" Connection	015096	N/A
	5" Connection	015097	015097
	6" Connection	009802F	009802F
9-S	Flue Exhaust Gasket	009735F	009735F
10-S	Flue Exhaust Cover Panel	009799F	009799F
11-S	Flue Exhaust Gasket	009735F	009735F
12-S	Chamber Assy	014139F	014140F
13-S	Front Panels Left & Right	014141F	014141F
14-S	Door Assy	014142F	014142F
15-S	Door Insert SS	014143F	014143F
16-S	Access Panel Intake Air	014144F	014144F
17-S	Access Panel Igniter	014145F	014145F
18-S	Jacket Side Panel Right	014146F	014146F
19-S	Jacket Side Panel Left	014147F	014147F
20-S	Jacket Rear Panel	014148F	014148F
21-S	Flue Exhaust Cover	014149F	014149F
22-S	Flue Exhaust Gasket	014290F	014290F
23-S	Upper Cabinet Supports	014150F	014150F
24-S	Vertical Cabinet Supports	014151F	014151F
25-S	Window Reflector	014152F	014152F
26-S	Control/Wiring Box Covers	014153F	014153F
V	**VENTING**		
1-V	Stackless Top	014154F	014154F
2-V	Flue Exhaust Gasket	014155F	014155F
3-V	Flue Exhaust Gasket Retainer	014156F	014156F
4-V	Retainer Stackless top Mtg	014157F	014157F
5-V	Outdoor Stack Kit	013978	013978
6-V	Flue Exhaust Gasket Retainer	010030F	010030F
7-V	Horizontal Vent Termination 4"	014289	N/A
	Horizontal Vent Termination 5"	014288	014288
	Horizontal Vent Termination 6"	014159	014159
8-V	Flue Exhaust Outlet Adapter 6" x 7"	014050	014050
	Flue Exhaust Outlet Adapter 6" x 8"	014051	014051
	Flue Exhaust Outlet Adapter 6" x 9"	014052	014052
9-V	Flue Exhaust Adapter 4"	008776	N/A
	Flue Exhaust Adapter 5"	007004	007004
	Flue Exhaust Adapter 6"	007005	007005
CONVERSION KITS*		**259**	**409**
	Nat. to Pro.	N/A	N/A
	Pro. to Nat.	N/A	N/A

*** Gas conversions are to be done only by a qualified agency.**

Raypak
A Rheem Company
ISO 9001
Registered Quality Management System

www.raypak.com