Hybrid Heat Pump Water Heaters

Professional Ultra™ Hybrid Heat Pump is our most advanced, energy-efficient electric water heater – its 2.45 Energy Factor lowers energy costs

Efficiency

- High 2.45 EF reduces operating cost $329 annually compared to a standard 50-gallon electric model
- ENERGY STAR® rated

Performance

- 8700 Btu/h compressor: the most powerful in its class – more heat can be created by the heat pump and less by the costly electric elements. This translates into significant fuel saving in real life applications. For still more savings, the Ruud hybrid has a wider temperature operating range, which means the heat pump can be used to heat water more days throughout the year.
- Ambient operating range: 37-120° F is widest in class, offering more days of HP operation annually; designed to meet Northern Climate Spec (Tier 1)

Operation Modes

- Energy Saver
- Heat Pump Only
- High Demand
- Electric Heat Only
- Vacation: 2-28 days (or placed on hold indefinitely)

Full-Color LCD Display

- Intuitive, back lit touch screen with diagnostics

Easy Installation

- Easy access side connections
- Narrow 21" diameter, fits through access doors
- Easily replaces a standard electric water heater

Plus…

- EcoNet™ compatible for future integration with home automation, energy management and demand response systems
- Patented magnesium anode rod with resistor extends the life of the tank
- 3/4" NPT water inlet, outlet and condensate drain connections
- Incoloy stainless steel resistor elements
- Dry-fire protection
- Easy access, top mounted washable air filter
- 2-1/2" Non-CFC foam insulation
- Enhanced flow brass drain valve
- Temperature and pressure relief valve included
- Low lead compliant

Warranty

- 12-Year limited tank and parts warranty*

*See Residential Warranty Certificate for complete information

Units meet or exceed ANSI requirements and have been tested according to D.O.E. procedures. Units meet or exceed the energy efficiency requirements of NAECA, ASHRAE standard 90, ICC Code and all state energy efficiency performance criteria.

Professional Ultra Hybrid Heat Pump
50-Gallon Capacity
208-230 Volt / 1 PH / 24 Amps
Electric

LEED Points = 3

myruud.com/proclub

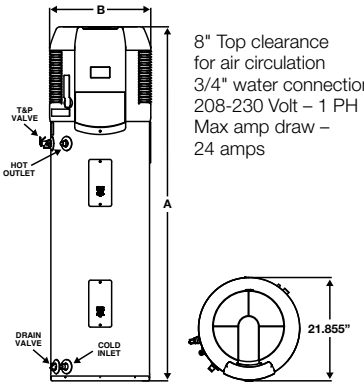

8" Top clearance
for air circulation
3/4" water connections
208-230 Volt – 1 PH
Max amp draw –
24 amps

DESCRIPTION			FEATURES			ROUGHING IN DIMENSIONS (SHOWN IN INCHES)				ENERGY INFO.
TYPE	GAL. CAP.	MODEL NUMBER	COMPRESSOR BTU/H	FIRST HOUR RATING G.P.H.	RECOVERY IN G.P.H. 90° F RISE	HEIGHT A	DIAMETER B	UNIT WT. (LBS)	APPROX. SHIP WT. (LBS)	ENERGY SAVER
Tall	50	HB50RU	8700	57	21	75-1/2	21	180	226	2.45 EF

Energy Factor based on D.O.E. (Department of Energy) test procedures.

PRINTED IN U.S.A. 09/13 WP FORM NO. 102R-65 Rev. 8

Ruud Residential Electric Professional Ultra

Hybrid Heat Pump Water Heaters

Full-Color LCD Display Screens

Start Up Screen

Press "Standby" to start

Energy Saver Mode 1
Best energy efficiency for typical hot water demands

Home Screen
Factory set to default to the "Energy Saver" mode screen

Modes 2-5

HP Only Mode:
Provides highest energy efficiency when hot water demands are low

High Demand Mode:
Right selection for very high demand
(simultaneous operation of multiple hot water fixtures)

Electric Heat Mode:
Operates like a standard electric water heater; no heat pump

Vacation Mode:
Can be set from 2 to 28 days (82°) or placed on "hold" indefinitely

Settings

- Select scale: Fahrenheit or Celsius
- Lock or unlock the home screen; Setting screen remains unlocked
- Enable/disable beeping alarm

Service

Current status of HB50 hybrid water heater

Displays model & serial nos., SW version; change network instance or run a test

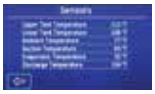

Shows temperatures in tank, ambient air, suction, evaporator and discharge

Displays current alarms and past alarms; ability to clear all alarms

Enabled

Press to toggle between Enabled & Standby

- Enabled: heats water
- Standby: doesn't heat water

Note: "Modes" can't be selected when unit is in "Standby"

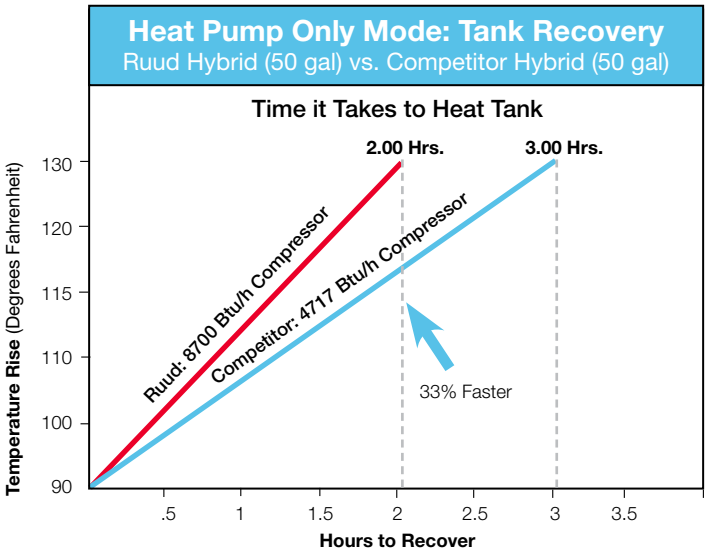

In keeping with its policy of continuous progress and product improvement, Ruud reserves the right to make changes without notice.

Ruud Water Heating • 101 Bell Road, Montgomery, Alabama 36117-4305 • www.ruud.com

PRINTED IN U.S.A. 09/13 WP FORM NO. 102R-65 Rev. 8